iRAYPLE

MACHINE VISION

·PRODUCT MANUAL·

www.irayple.com/en

MACHINE VISION

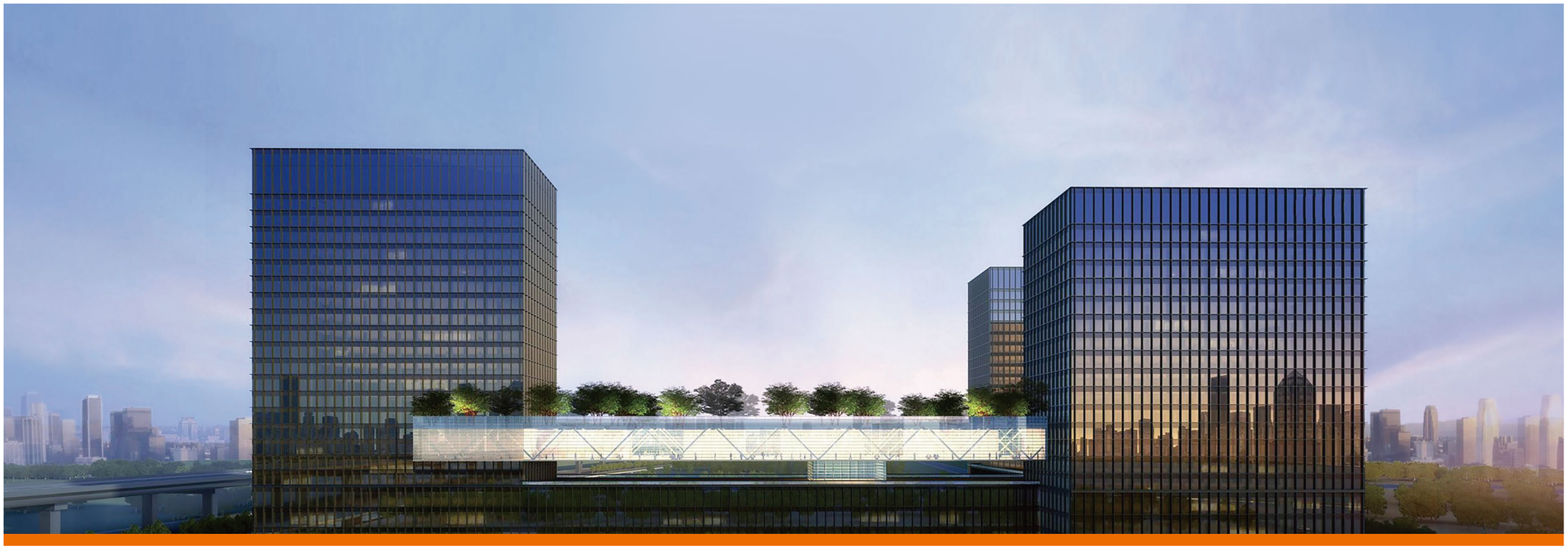

COMPANY PROFILE

Zhejiang HuaRay Technology Co., Ltd. is a company dedicated in research & development, manufacturing, and sales & marketing of machine vision and autonomous mobile robot (AMR) products. With focus in smart manufacturing technologies and logistics innovation, we are committed to creating and delivering value for our customers by enabling a smart factory transformation.

As a national high-tech enterprise, HuaRay aims to bring the latest technological innovations to our valuable customers. More than 60% of its employees are dedicated in R&D, and the company has filed over 300 patent applications. With its investment in R&D, HuaRay has developed deep know-how in its embedded software, image optimization, recognition algorithms, network transmission, navigation, positioning, scheduling, motion control, and other technical fields.

HuaRay' s products and solutions are widely applied in various industries such as logistics, automotive, 3C, lithium battery, photovoltaic, semiconductor, pharmaceutical, and so on. Our machine vision products include industrial area scan cameras, line scan cameras, smart industrial cameras, vision sensors, 3D industrial cameras, and lenses. These products have been used for code recognition, OCR, vision measurement, positioning, defect detection, etc. In addition, our autonomous mobile robot (AMR) products include latent lift, towing, forklifts, and sorting robots are widely used for warehouses and material handling applications.

CORPORATE OVERVIEW

500 +
R&D Engineers

420 +
Number of Patents

30 +
Covering Countries and Regions

CORPORATE CULTURE

Values
Customer-oriented and committed to customer success

Mission
Enabling a smart factory transformation

Vision
Provide customers with high quality products and solutions

CONTENTS

1 AREA SCAN CAMERAS

3000 Series Area Scan Cameras 02
5000 Series Area Scan Cameras 04
7000 Series Area Scan Cameras 07
Board-level Industrial Cameras 10

2 LARGE AREA SCAN CAMERAS

GigE 14
10GigE 15
CameraLink 16
CoaXPress-6 17
CoaXPress-12 19

3 LINE SCAN CAMERAS

GigE 21
CameraLink 22

4 X86 SMART CAMERAS

X86 Smart Cameras 25

5 3D CAMERAS

3D Logistics Camera 27
3D Stereo Camera 28

6 FRAME GRABBER & EXPANSION CARD

4-channel GigE Expansion Card 30
4-channel USB 3.0 Expansion Card 31
CameraLink Frame Grabber 32
CXP-6 Frame Grabber 33
CXP-12 Frame Grabber 34

7 LENS

A9-6MP Series (1/1.8''6MP) 36
MK-M Series (2/3''10MP) 37
MH-X Series (1.1''12MP) 38
MT-X Series(1.1''25MP) 39
MH-K Series (4/3''10MP) 40
MH7532M (2/3''-75mm Short WD Lens) 42
31MP Large Image Circle 43
65MP Large Image Circle 44
IRAYPLE Camera SDK 45

AREA SCAN CAMERAS

Wide Variety of Product Options

3000 SERIES AREA SCAN CAMERAS

Superior Cost Efficiency

- Support wide resolution range, covering 0.5MP~20MP
- Apply CMOS, CCD sensor. Support global/rolling shutter
- Support powerful ISP algorithms
- Compatible with GigE Vision protocol, USB3.0 Vision protocol and GenICam standard
- Conform to CE, FCC and RoHS
- Superior cost efficiency

GigE

Model	Resolution	FPS	Bit Depth	Interface	Sensor						Dimension (mm)	Recommended Lens
					Model	Type	Pixel Size (μm)	Size	Shutter	Mono/ Color		
A3051MG100E	800×600	120	10	GigE	PYTHON480	CMOS	4.8×4.8	1/3.6"	Global	M	29×29×29	A9-6MP
A3051M/CG000E	800×600	120	10	GigE, POE	PYTHON480	CMOS	4.8×4.8	1/3.6"	Global	M/C	29×29×42	A9-6MP
A3135M/CG000E	1280×960	30	14	GigE, POE	RJ33J4/3CA0DT	CCD	3.75×3.75	1/3"	Global	M/C	29×29×42	A9-6MP
A3124M/CG100E	1280×960	54	12	GigE	AR0135	CMOS	3.75×3.75	1/3"	Global	M/C	29×29×29	A9-6MP
A3131MG100E	1280×1024	60	10	GigE	PHYON1300	CMOS	4.8×4.8	1/2"	Global	M	29×29×29	A9-6MP
A3131M/CG000E	1280×1024	60	10	GigE, POE	PHYON1300	CMOS	4.8×4.8	1/2"	Global	M/C	29×29×42	A9-6MP
A3138M/CG100E	1280×1024	86.5	10	GigE	SS	CMOS	4.0×4.0	1/2 .7	Global	M/C	29×29×29	A9-6MP
A3138M/CG000E	1280×1024	86.5	10	GigE, POE	SS	CMOS	4.0×4.0	1/2 .7	Global	M/C	29×29×42	A9-6MP
A3200MG004E	1920×1080	22	10	GigE, POE	IMX290	CMOS	2.9×2.9	1/2.8"	Rolling	M	29×29×42	A9-6MP
A3200CG000E	1920×1080	22	10	GigE, POE	IMX290	CMOS	2.9×2.9	1/2.8"	Rolling	C	29×29×42	A9-6MP
A3504M/CG100E	2592×1944	23	12	GigE	AR0521	CMOS	2.2×2.2	1/2.5"	Rolling	M/C	29×29×29	A9-6MP
A3504M/CG000E	2592×1944	23	12	GigE, POE	AR0521	CMOS	2.2×2.2	1/2.5"	Rolling	M/C	29×29×42	A9-6MP
A3600MG100E	3072×2048	18	12	GigE	IMX178	CMOS	2.4×2.4	1/1.8"	Rolling	M	29×29×29	A9-6MP
A3600M/CG18E	3072×2048	18	12	GigE, POE	IMX178	CMOS	2.4×2.4	1/1.8"	Rolling	M/C	29×29×42	A9-6MP
A3A20M/CG8E	4000×3000	9	12	GigE, POE	IMX226	CMOS	1.85×1.85	1/1.7"	Rolling	M/C	29×29×42	A9-6MP
A3B00M/CG000E	5472×3648	5.8	10	GigE, POE	IMX183	CMOS	2.4×2.4	1"	Rolling	M/C	29×29×42	MH-X/MT-X

Dimensions (mm)

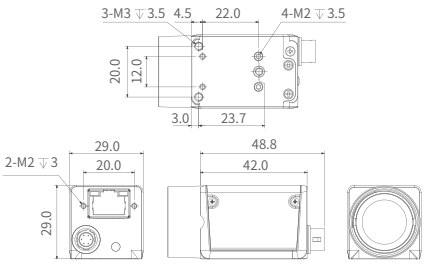

29mm×29mm×42mm

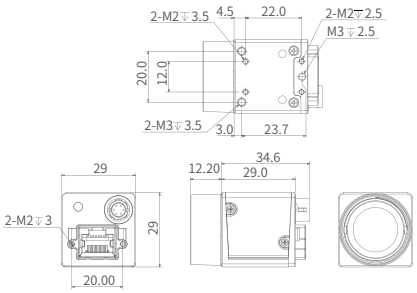

29mm×29mm×29mm

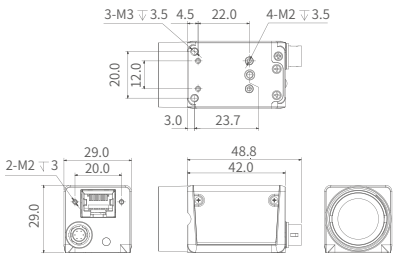

29mm×29mm×42mm

USB

Model	Resolution	FPS	Bit Depth	Interface	Sensor						Dimension (mm)	Recommended Lens
					Model	Type	Pixel Size (μm)	Size	Shutter	Mono/ Color		
A3135M/CU000E	1280×960	33	14	USB3.0	RJ33J4/3CA0DT	CCD	3.75×3.75	1/3"	Global	M/C	29×29×29	A9-6MP
A3138M/CU000E	1280×1024	201	10	USB3.0	SS	CMOS	4.0×4.0	1/2.7	Global	M/C	29×29×29	A9-6MP
A3200CU000E	1920×1080	120	10	USB3.0	IMX290	CMOS	2.9×2.9	1/2.8"	Rolling	C	29×29×29	A9-6MP
A3504M/CU000E	2592×1944	48	12	USB3.0	AR0521	CMOS	2.2×2.2	1/2.5"	Rolling	M/C	29×29×29	A9-6MP
A3600M/CU60E	3072×2048	60	10	USB3.0	IMX178	CMOS	2.4×2.4	1/1.8"	Rolling	M/C	29×29×29	A9-6MP
A3A20M/CU24E	4000×3000	30	10	USB3.0	IMX226	CMOS	1.85×1.85	1/1.7"	Rolling	M/C	29×29×29	A9-6MP
A3B00M/CU000E	5472×3648	19.2	10	USB3.0	IMX183	CMOS	2.4×2.4	1"	Rolling	M/C	29×29×29	MH-X/MT-X

Dimensions (mm)

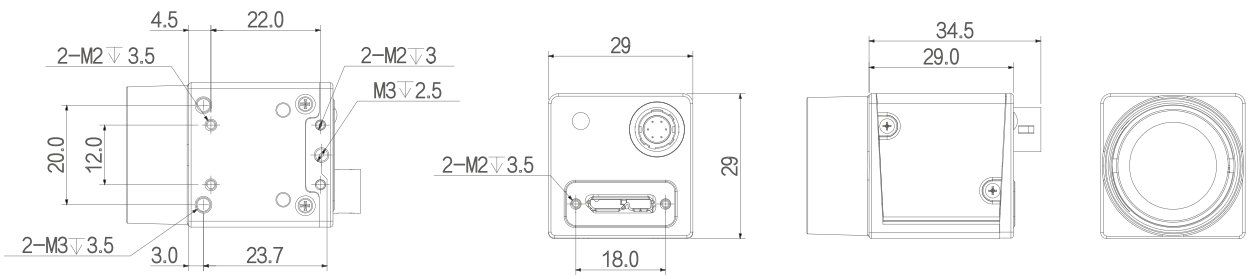

5000 SERIES AREA SCAN CAMERAS

Outstanding Image Quality

- Support wide resolution range, covering 0.5MP~25MP
- Apply CMOS sensor with global shutter and high frame rate
- Support powerful ISP algorithms
- Support GigE Vision protocol, USB3.0 Vision protocol and GenICam
- Conform to CE, FCC and RoHS
- Excellent image quality

Gige,POE

Model	Resolution	FPS	Bit Depth	Interface	Sensor						Dimension (mm)	Recommended Lens
					Model	Type	Pixel Size (μm)	Size	Shutter	Mono/ Color		
A5031M/CG300E	640×480	300	10	GigE, POE	PYTHON300	CMOS	4.8×4.8	1/4"	Global	M/C	29×29×42	A9-6M
A5051M/CG200E	800×600	200	10	GigE, POE	PYTHON500	CMOS	4.8×4.8	1/3.6"	Global	M/C	29×29×42	A9-6M
A5131M/CG75E	1280×1024	90	10	GigE, POE	PYTHON1300	CMOS	4.8×4.8	1/2"	Global	M/C	29×29×42	A9-6M
A5200M/CG000E	1624×1240	60	10	GigE, POE	IMX430	CMOS	4.5×4.5	1/1.7"	Global	M/C	29×29×42	A9-6M
A5201M/CG50E	1920×1200	50	10	GigE, POE	PYTHON2000	CMOS	4.8×4.8	2/3"	Global	M/C	29×29×42	MK-M
A5501M/CG20E	2592×2048	20	10	GigE, POE	PYTHON5000	CMOS	4.8×4.8	1"	Global	M/C	29×29×42	MH-X
A5907MG200E	2592×2048	13	12	GigE, POE	GMAX2509	CMOS	2.5×2.5	2/3"	Global	M/C	29×44×58	MK-M
A5B57M/CG200E	5120×5120	4	12	GigE, POE	GMAX0505	CMOS	2.5×2.5	1.1"	Global	M/C	29×44×58	MT-X/MH-X

Dimensions (mm)

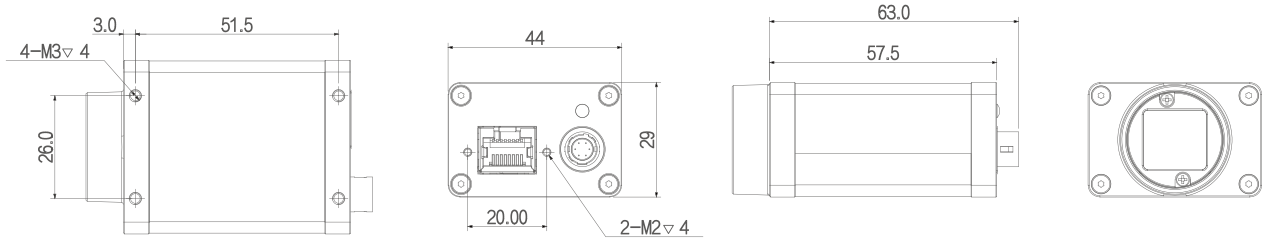

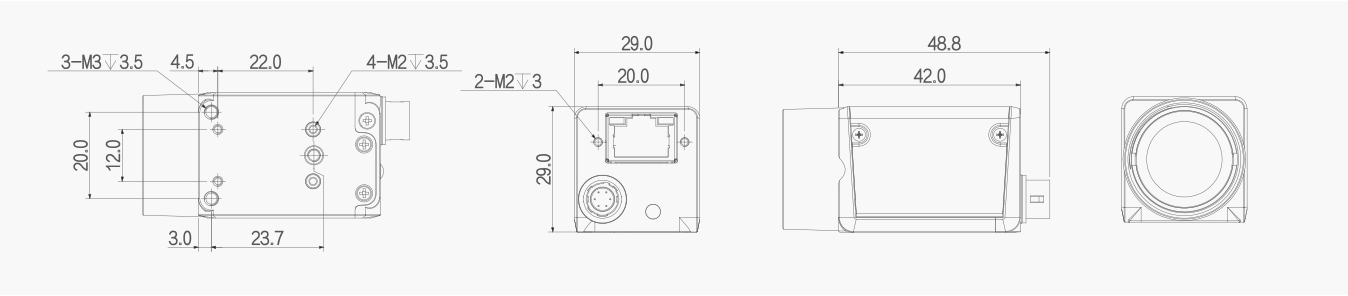

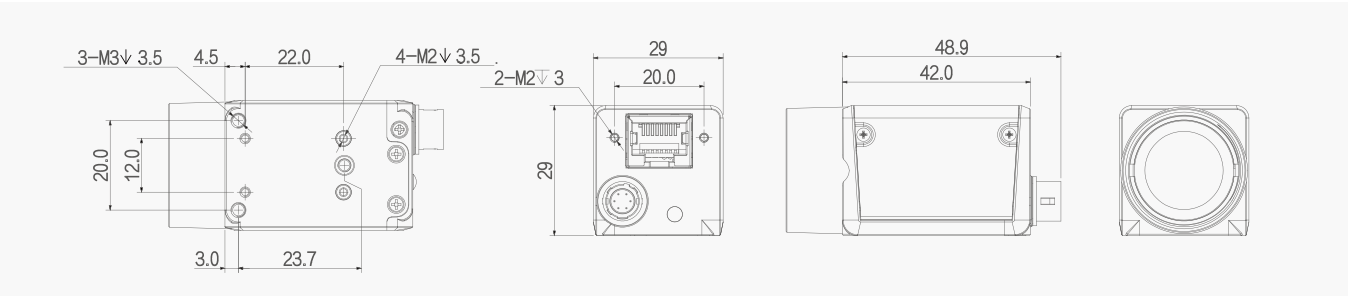

USB

Model	Resolution	FPS	Bit Depth	Interface	Sensor						Dimension (mm)	Recommended Lens
					Model	Type	Pixel Size (μm)	Size	Shutter	Mono/ Color		
A5031M/CU815E	640×480	815	10	USB 3.0	PYTHON300	CMOS	4.8×4.8	1/4"	Global	M/C	29×29×29	A9-6M
A5051M/CU545E	800×600	545	10	USB 3.0	PYTHON500	CMOS	4.8×4.8	1/3.6"	Global	M/C	29×29×29	A9-6M
A5131MU001E	1280×1024	90	10	USB 3.0	PYTHON1300	CMOS	4.8×4.8	1/2"	Global	M	29×29×29	A9-6M
A5131M/CU210E	1280×1024	208	10	USB 3.0	PYTHON1300	CMOS	4.8×4.8	1/2"	Global	M/C	29×29×29	A9-6M
A5200M/CU000E	1624×1240	89	12	USB3.0	IMX430	CMOS	4.5×4.5	1/1.7"	Global	M/C	29×29×29	A9-6M
A5201M/CU150E	1920×1200	150	10	USB 3.0	PYTHON2000	CMOS	4.8×4.8	2/3"	Global	M/C	29×29×29	MK-M
A5501M/CU60E	2592×2048	60	10	USB 3.0	PYTHON5000	CMOS	4.8×4.8	1"	Global	M/C	29×29×29	MH-X
A5B57M/CU200E	5120×5120	14	12	USB 3.0	GMAX0505	CMOS	2.5×2.5	1.1"	Global	M/C	29×44×58	MH-X/MT-X

Dimensions (mm)

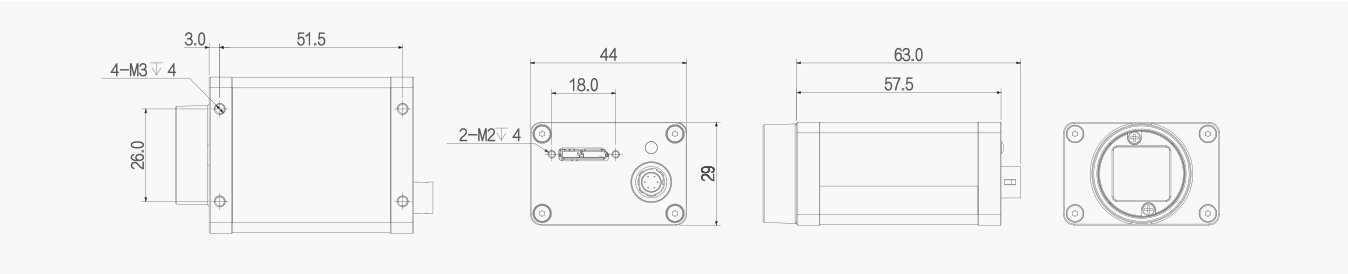

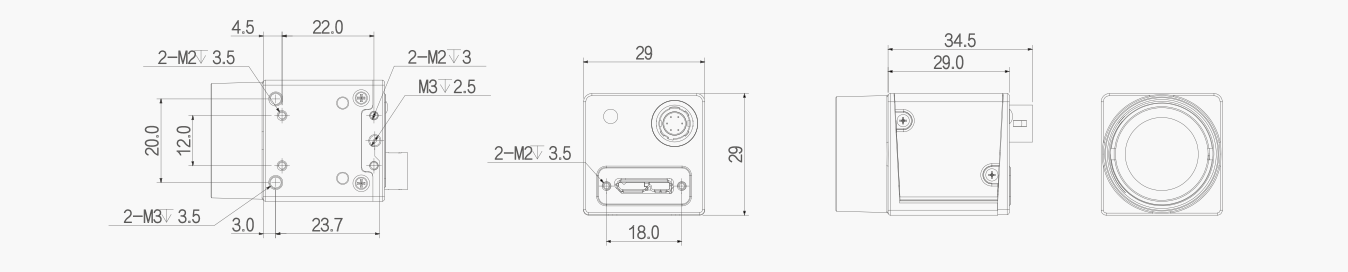

CameraLink

Model	Resolution	FPS	Bit Depth	Interface	Sensor						Dimension (mm)	Recommended Lens
					Model	Type	Pixel Size (μm)	Size	Shutter	Mono/ Color		
A5201M/CK402E	1920×1200	37.8	10	CameraLink	PYTHON2000	CMOS	4.8×4.8	2/3"	Global	M/C	29×29×43.8	MK-M
A5B57MK200E	5120×5120	30	10	CameraLink	GMAX0505	CMOS	2.5×2.5	1.1"	Global	M	29×44×58	MT-X

Dimensions (mm)

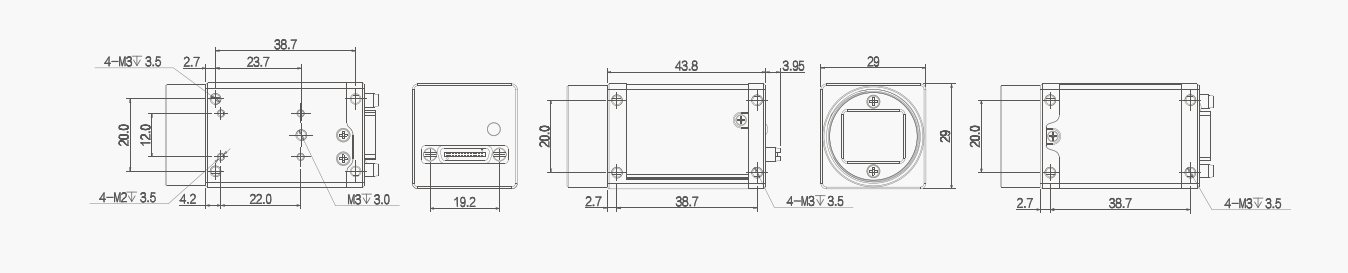

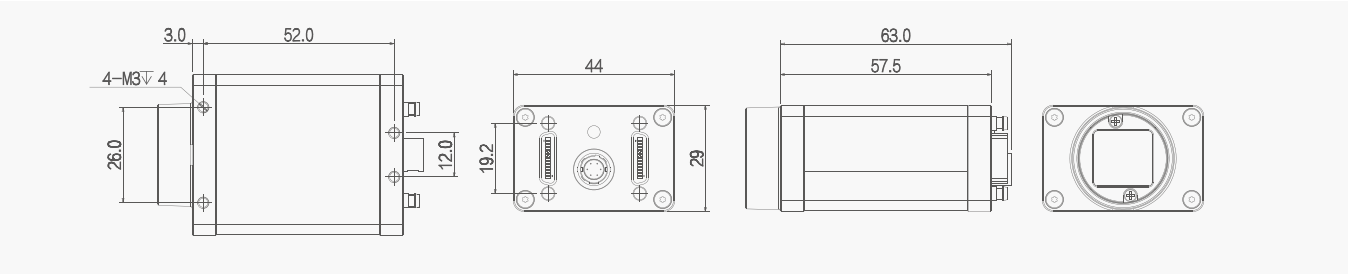

7000 SERIES AREA SCAN CAMERAS

Extraordinary Image Quality and Performance

- Support wide resolution range covering 0.4MP~12MP
- Apply Sony CMOS sensor with global shutter and high frame rate
- Support powerful ISP algorithms
- Compatible with GigE Vision protocol, USB3.0 Vision protocol, CameraLink and GenICam standard
- Conform to CE, FCC and RoHS
- Extraordinary image quality

GigE

Model	Resolution	FPS	Bit Depth	Interface	Sensor						Dimension (mm)	Recommended Lens
					Model	Type	Pixel Size (μm)	Size	Shutter	Mono/ Color		
A7040M/CG000E	720×540	300	12	GigE, POE	IMX287	CMOS	6.9×6.9	1/2.9"	Global	M/C	29×29×42	A9-6M
A7160M/CG000E	1440×1080	77	12	GigE, POE	IMX273	CMOS	3.45×3.45	1/2.9"	Global	M/C	29×29×42	A9-6M
A7170M/CG200E	1604×1100	66	12	GigE, POE	IMX432	CMOS	9.0×9.0	1.1"	Global	M/C	29×44×58	MH-X
A7200M/CG30E	1920×1200	38.7	12	GigE, POE	IMX249	CMOS	5.86×5.86	1/1.2"	Global	M/C	29×29×42	MH-X
A7300M/CG30E	2048×1536	36	12	GigE, POE	IMX265	CMOS	3.45×3.45	1/1.8"	Global	M/C	29×29×42	A9-6M
A7500M/CG20E	2448×2048	23	12	GigE, POE	IMX264	CMOS	3.45×3.45	2/3"	Global	M/C	29×29×42	MK-M
A7500PG400E	2448×2048	24	12	GigE, POE	IMX250MZR	CMOS	3.45×3.45	2/3"	Global	p	29×29×42	MK-M
A7501M/CG010E	2592×2048	21	12	GigE, POE	XGS5000	CMOS	3.2×3.2	2/3"	Global	M/C	29×29×42	MK-M
A7710M/CG200E	3208×2200	17	12	GigE, POE	IMX428	CMOS	4.5×4.5	1.1"	Global	M/C	29×44×58	MH-X
A7801MG400E	4096×2160	13	12	GigE, POE	XGS8000	CMOS	3.2×3.2	1/1.1"	Global	M	29×29×42	MH-X/MT-X
A7900M/CG13E	4096×2160	13	12	GigE, POE	IMX267	CMOS	3.45×3.45	1"	Global	M/C	29x44×58	MH-X
A7A20M/CG9E	4096×3000	9	12	GigE, POE	IMX304	CMOS	3.45×3.45	1.1"	Global	M/C	29×44×58	MH-X
A7A21MG400E	4096×3072	9	12	GigE, POE	XGS12000	CMOS	3.2×3.2	1"	Global	M	29×29×42	MH-X/MT-X
A7A21M/CG200E	4096×3072	9	12	GigE, POE	XGS12000	CMOS	3.2×3.2	1"	Global	M/C	29×44×58	MH-X/MT-X

Dimensions

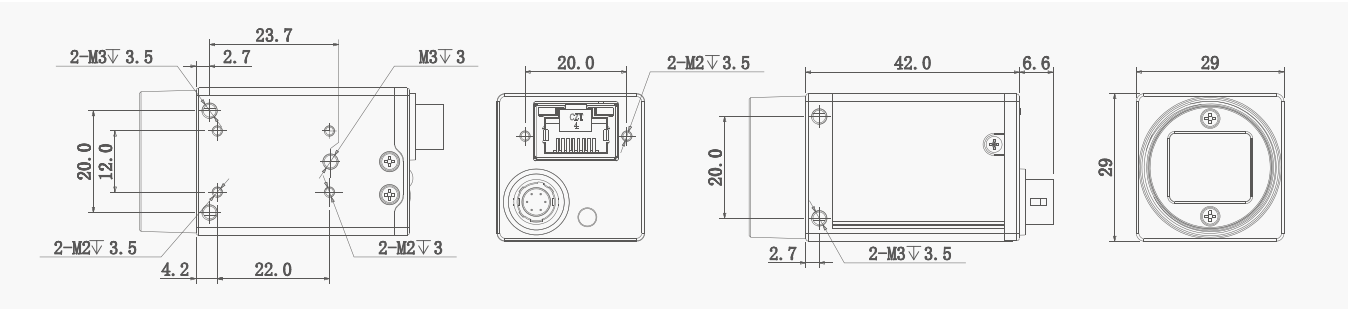

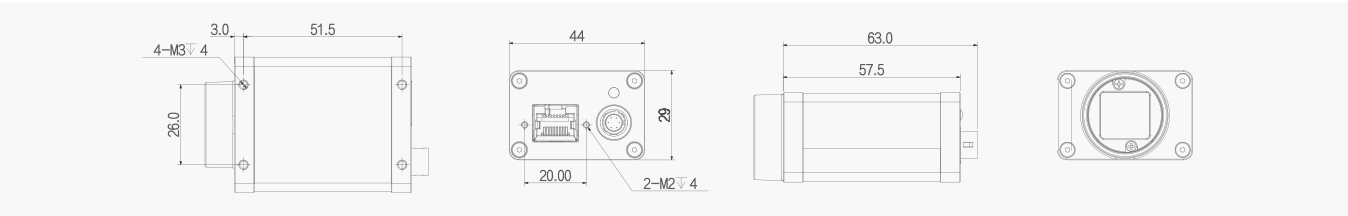

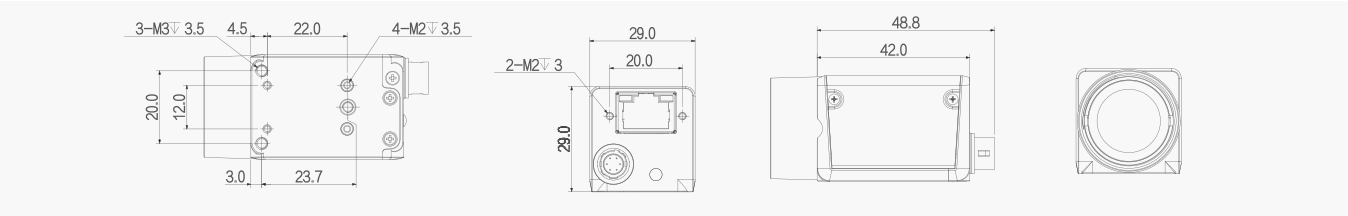

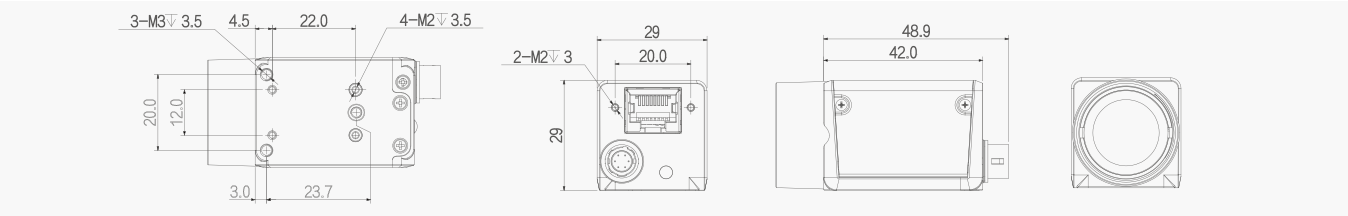

USB 3.0

Model	Resolution	FPS	Bit Depth	Interface	Sensor						Dimension (mm)	Recommended Lens
					Model	Type	Pixel Size (μm)	Size	Shutter	Mono/ Color		
A7040M/CU000E	720×540	438	10	USB 3.0	IMX287	CMOS	6.9×6.9	1/2.9"	Global	M/C	29×29×29	A9-6MP
A7160M/CU000E	1440×1080	249	12	USB 3.0	IMX273	CMOS	3.45×3.45	1/2.9"	Global	M/C	29×29×29	A9-6MP
A7200M/CU001E	1920×1200	38.7	12	USB 3.0	IMX249	CMOS	5.86×5.86	1/1.2"	Global	M/C	29×29×29	MH-X
A7200M/CU130E	1920×1200	164	10	USB 3.0	IMX174	CMOS	5.86×5.86	1/1.2"	Global	M/C	29×29×29	MH-X
***A7300CU001E**	2048×1526	55	12	USB 3.0	IMX265	CMOS	3.45×3.45	1/1.8"	Global	C	29×29×29	A9-6MP
A7300M/CU90E	2048×1536	120	10	USB 3.0	IMX252	CMOS	3.45×3.45	1/1.8"	Global	M/C	29×29×29	A9-6MP
A7500M/CU35E	2448×2048	35	12	USB 3.0	IMX264	CMOS	3.45×3.45	2/3"	Global	M/C	29×29×29	MK-M
A7500M/CU75E	2448×2048	75	10	USB 3.0	IMX250	CMOS	3.45×3.45	2/3"	Global	M/C	29×29×29	MK-M
A7501M/CU001E	2592×2048	43	12	USB 3.0	XGS5000	CMOS	3.2×3.2	2/3"	Global	M/C	29×29×29	MK-M
A7900M/CU200E	4096×2160	40	10	USB 3.0	IMX255	CMOS	3.45×3.45	1"	Global	M/C	29x44x58	MH-X/MT-X
A7900M/CU201E	4096×2160	32	12	USB 3.0	IMX267	CMOS	3.45×3.45	1"	Global	M/C	29x44x58	MH-X/MT-X
A7A20M/CU30E	4096×3000	30	10	USB 3.0	IMX253	CMOS	3.45×3.45	1.1"	Global	M/C	29x44x58	MH-X/MT-X
A7A20M/CU201E	4096×3000	30.5	12	USB 3.0	IMX304	CMOS	3.45×3.45	1.1"	Global	M/C	29x44x58	MH-X/MT-X

Note: Models with Symbol "*" are latest-released products.

Dimensions

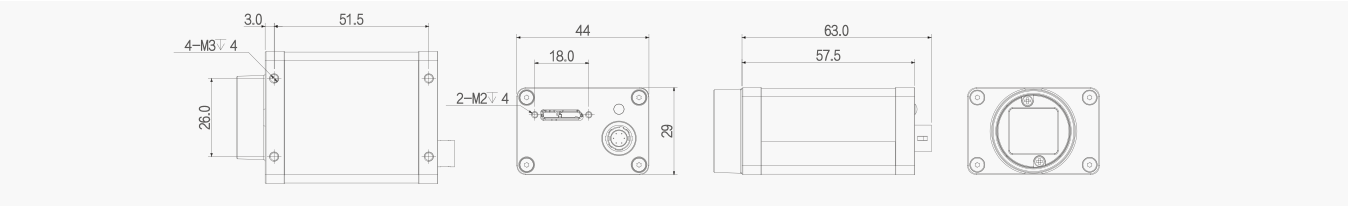

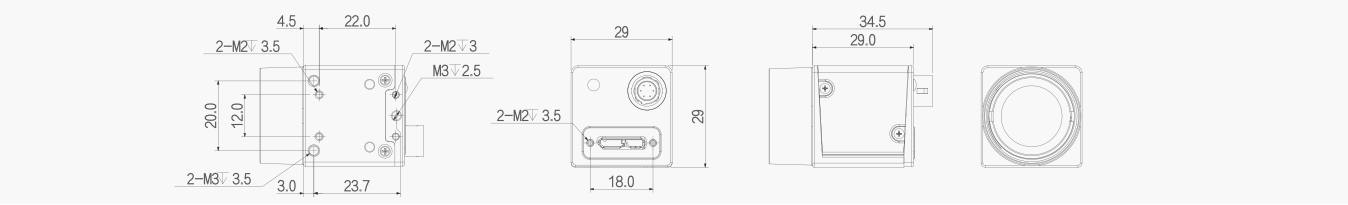

CameraLink

Model	Resolution	FPS	Bit Depth	Interface	Sensor						Dimension (mm)	Recommended Lens
					Model	Type	Pixel Size (μm)	Size	Shutter	Mono/ Color		
A7040M/CK402E	720×540	349	10	Camera Link	IMX287	CMOS	6.9×6.9	1/2.9"	Global	M/ C	29×29×43.8	A9-6M
A7300MK200E	2048×1536	188	10	Camera Link	IMX252	CMOS	3.45×3.45	1/1.8"	Global	M	29×44×58	A9-6M
A7500M/CK200E	2448×2048	150	10	Camera Link	IMX250	CMOS	3.45×3.45	2/3"	Global	M/C	29×44×58	MK-M
A7500MK402E	2448×2048	37.2	12	Camera Link	IMX264	CMOS	3.45×3.45	2/3"	Global	M	29×29×43.8	MK-M
A7900CK401E	4096×2160	27	8	Camera Link	IMX267	CMOS	3.45×3.45	1"	Global	C	29×29×43.8	MH-X/MT-X
A7A20M/CK401E	4096×3000	20	12	Camera Link	IMX304	CMOS	3.45×3.45	1.1"	Global	M/C	29×29×43.8	MH-X/MT-X
A7A21M/CK401E	4096×3072	18	12	Camera Link	XGS12000	CMOS	3.2×3.2	1"	Global	M/C	29×29×43.8	MH-X/MT-X
A7A21MK200E	4096×3072	56	12	Camera Link	XGS12000	CMOS	3.2×3.2	1"	Global	M	29×44×58	MH-X/MT-X

Dimensions (mm)

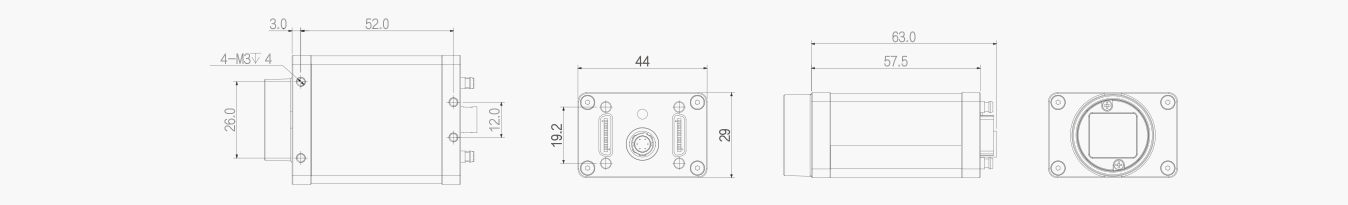

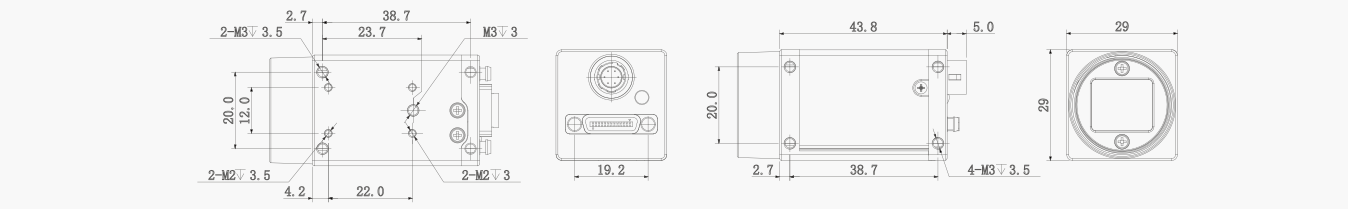

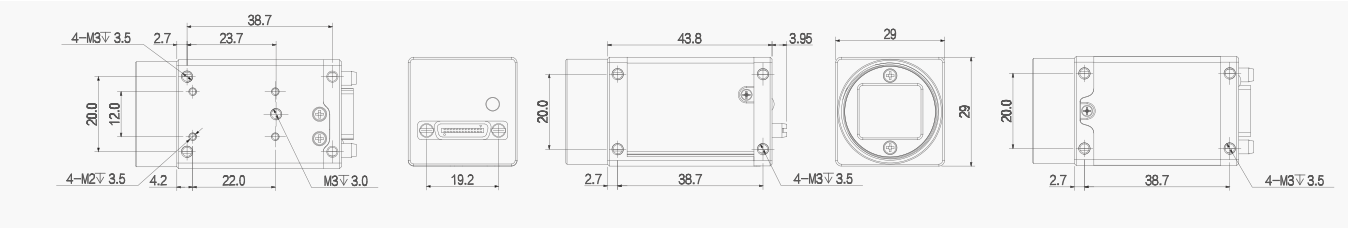

BOARD-LEVEL INDUSTRIAL CAMERAS

Compact Design Enables Easy Integration

- Support wide resolution range covering 0.5MP~12MP
- Apply CMOS sensor with global shutter and high frame rate
- Support powerful ISP algorithms
- Compatible with GigE Vision protocol, USB3.0 Vision protocol, GenICam standard
- Conform to CE, FCC and RoHS
- Extraordinary image quality

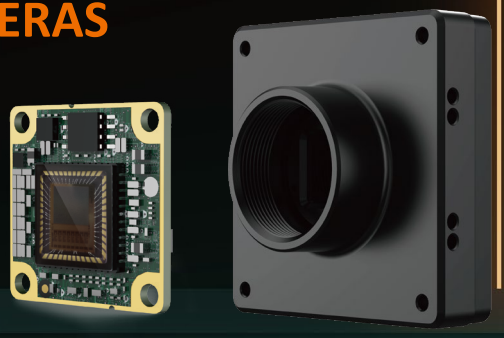

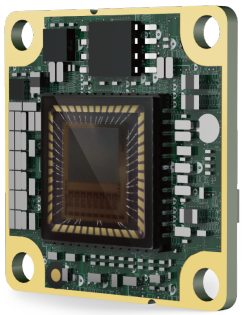

HCON BOARD-LEVEL CAMERA

· Complete functions are avaliable on one compact-deisgn board
· Suitable for embedded product development
· Superior cost efficiency
· Apply CMOS sensor with global shutter and rolling shutter
· Easy installation, one FPC cable supports power supply & data transmission
· Provide source code for HCON interface drivers
· Provide full suite of development documents
· Support SPC

Model	Resolution	FPS	Bit Depth	Interface	Sensor						Dimension (mm)
					Model	Type	Pixel Size (μm)	Size	Shutter	Mono/ Color	
AB3600M/CH080E	3072×2048	25	12	HCON	IMX178	CMOS	2.4×2.4	1/1.8"	Rolling	M	27×27
AB5131M/CH080E	1280×1024	60	10	HCON	PYTHON1300	CMOS	4.8×4.8	1/ 2"	Global	M	27×27
AB7500M/CH080E	2448×2048	30	12	HCON	IMX264	CMOS	3.45×3.45	2/ 3"	Global	M	26×40

Dimensions (mm)

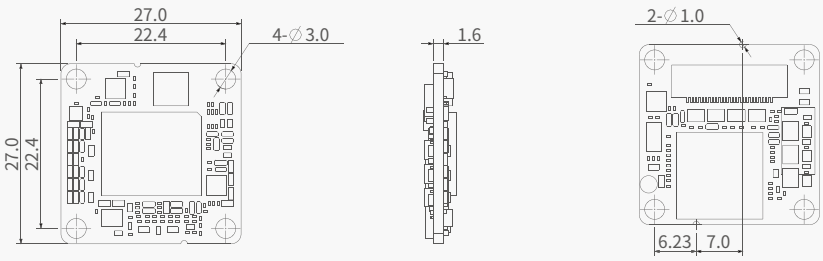

GIGE BOARD-LEVEL CAMERA

· Compact design, 45×45mm (without fixing structure) or 55mm×55mm×14mm (with fixing structure)
· Support C/CS/M12 mount
· Support 4-side Mounting
· Support powerful ISP algorithms
· Compatible with GigE Vision protocol and GenICam standard
· Conform to CE, FCC and RoHS
· Superior cost efficiency

Model	Resolution	FPS	Bit Depth	Interface	Sensor						Dimension (mm)
					Model	Type	Pixel Size (μm)	Size	Shutter	Mono/ Color	
AB3051MG020E	800×600	120	10	GigE	PYTHON480	CMOS	4.8×4.8	1/ 3.6"	Global	M	55×55×14
AB3600MG000E	3072×2048	18	12	GigE	IMX178	CMOS	2.4×2.4	1/ 1.8"	Rolling	M	55×55×14
AB3131MG023E	1280×1024	60	10	GigE	PYTHON1300	CMOS	4.8×4.8	1/ 2"	Global	M	55×55×14

Dimensions (mm)

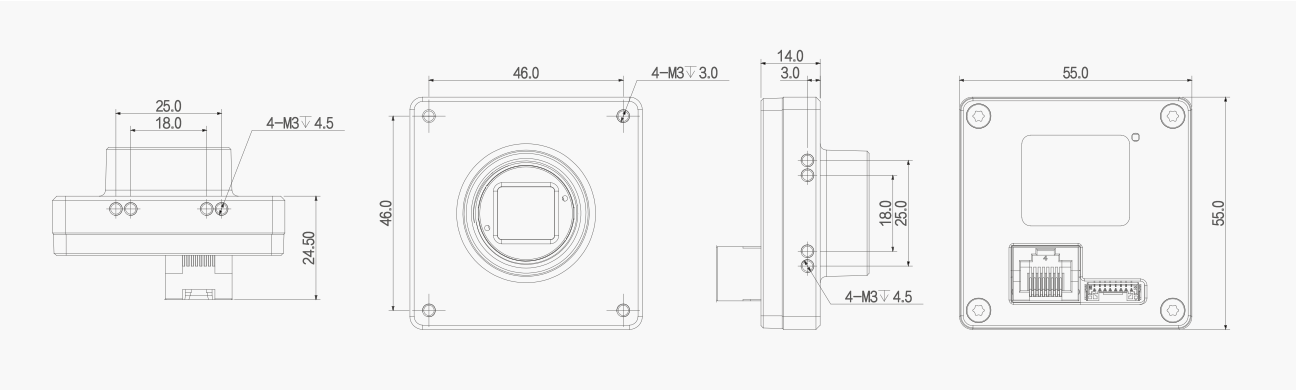

USB 3.0 BOARD-LEVEL CAMERA

· Compact structure, integrated in 35×35×19 dimension (not including lens mount and rear case connector)
· Support C/M12 lens
· Support 4-side mount
· Support strong ISP algorithms
· Compatible with USB3.0 Vision protocol and GenICam standard
· Conform to CE, FCC and RoHS
· Superior cost performance

Model	Resolution	FPS	Bit Depth	Interface	Sensor						Dimension (mm)
					Model	Type	Pixel Size (μm)	Size	Shutter	Mono/ Color	
AB3138MU000E	1280×1024	201	10	USB 3.0	SS	CMOS	4.0×4.0	1/ 2.7"	Global	M	35×35×19
AB3600M/CU000E	3072×2048	60	10	USB 3.0	IMX178	CMOS	2.4×2.4	1/ 1.8"	Rolling	M/C	35×35×19
AB3600CU010E	3072×2048	60	10	USB 3.0	IMX178	CMOS	2.4×2.4	1/ 1.8"	Rolling	C	35×35×19
AB3A20M/CU000E	4000×3000	30	10	USB 3.0	IMX226	CMOS	1.85×1.85	1/1.7"	Global	M/C	35×35×19
AB5131M/CU000E	1280×1024	208	10	USB 3.0	PYTHON1300	CMOS	4.8×4.8	1/ 2"	Global	M/C	35×35×19

Dimensions (mm)

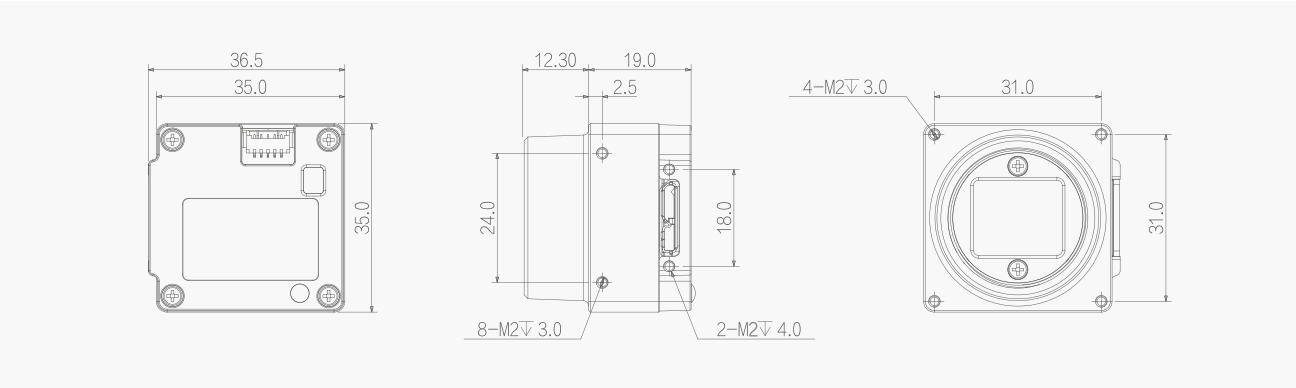

LARGE AREA SCAN CAMERAS

High Resolution & High Frame Rate

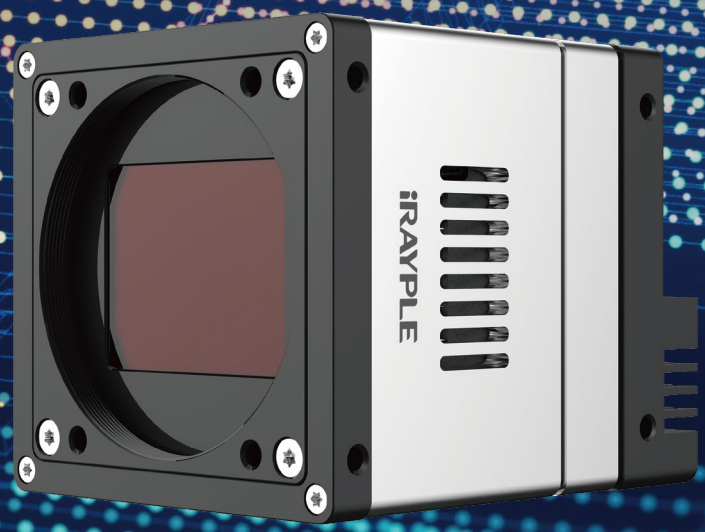

LARGE AREA SCAN CAMERAS

High Resolution & High Frame Rate

- Abundant resolution covers from 12MP to 151MP
- Rich interface covers GigE, 10GigE, CameraLink and CoaXPress-6/12
- Layer-by-layer stacking technology ensures excellent heat dissipation effect
- High Precise imaging parallelism design reduce the deflection of image
- Advanced pixel by pixel FFC algorithm to maximize pixel consistency
- Support wide range power supply input

GigE

Model	Resolution	FPS	Bit Depth	Interface	Sensor						Dimension (mm)	Lens Mount	Recommended Lens
					Model	Type	Pixel Size (μm)	Size	Shutter	Mono/ Color			
AX7C10M/CG250E	6464×4852	3.6	12	GigE	IMX342	CMOS	3.45×3.45	22.3×16.7	Global	M/C	72×72×64.1	M58 (FBL 11.48)	F32-5035-M43
AX5E07M/CG250E	9344×5000	2.6	12	GigE	Customize	CMOS	3.2×3.2	29.9×16.0	Global	M/C	72×72×64.8	M58 (FBL 11.48)	F46-6035-M58
AX5F57M/CG250E	9344×7000	1.7	12	GigE	GMAX3265	CMOS	3.2×3.2	29.9×22.4	Global	M/C	72×72×64.8	M58 (FBL 11.48)	F46-6035-M58

Dimensions (mm)

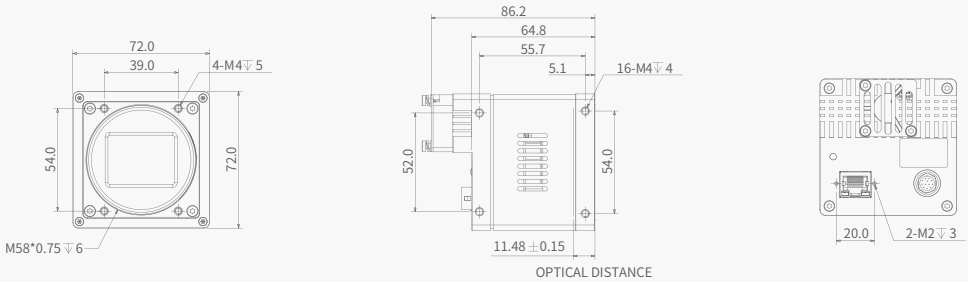

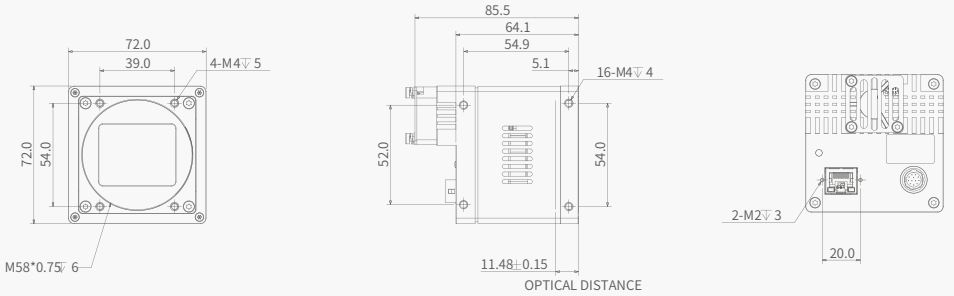

10 GigE

Model	Resolution	FPS	Bit Depth	Interface	Sensor						Dimension (mm)	Lens Mount	Recommended Lens
					Model	Type	Pixel Size (μm)	Size	Shutter	Mono/ Color			
AX7A20M/CT250E	4096×3000	68	10	10 GigE	IMX253	CMOS	3.45×3.45	1.1"	Global	M/C	72×72×78	M58 (FBL 11.48)	MH-X/MT-X
AX5B51M/CT250E	5120×5120	43	10	10 GigE	PYTHON25K	CMOS	4.5×4.5	23.0×23.0	Global	M/C	72×72×78.5	M58 (FBL 11.48)	F32-5035-M43
AX5B57M/CT250E	5120×5120	41	12	10 GigE	GMAX0505	CMOS	2.5×2.5	1.1"	Global	M/C	72×72×79	M58 (FBL 11.48)	MT-X
AX5F57M/CT250E	9344×7000	17.4	12	10 GigE	GMAX3265	CMOS	3.2×3.2	29.9×22.4	Global	M/C	72×72×80	M58 (FBL 11.48)	F46-6035-M58
AK5K37MT250E	11264×9200	11.3	12	10 Gige	GMAX32103	COMS	3.2×3.2	36.1×29.4	Global	M	72×72×79	M58 (FBL 11.48)	F46-6035-M58

Dimensions (mm)

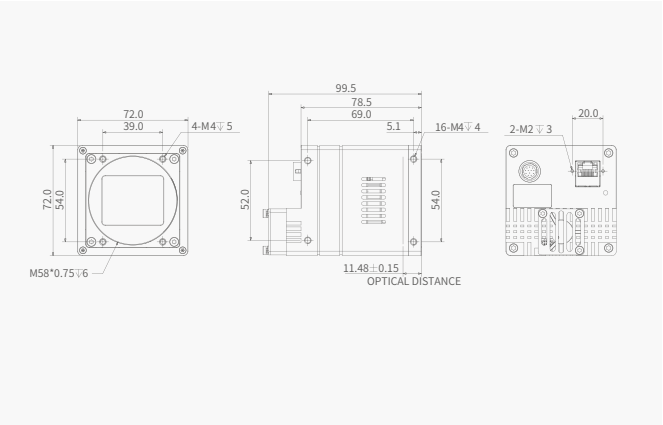

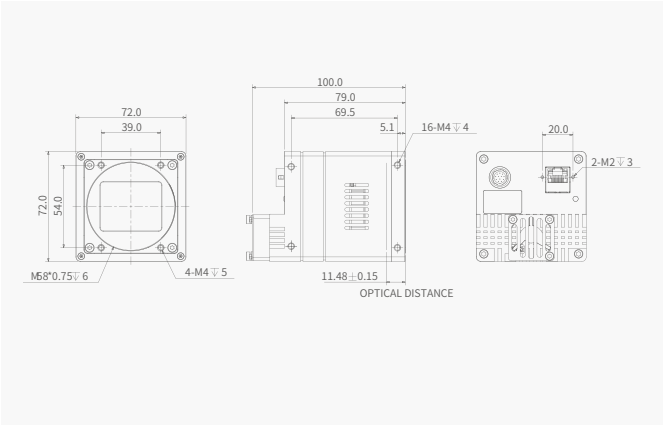

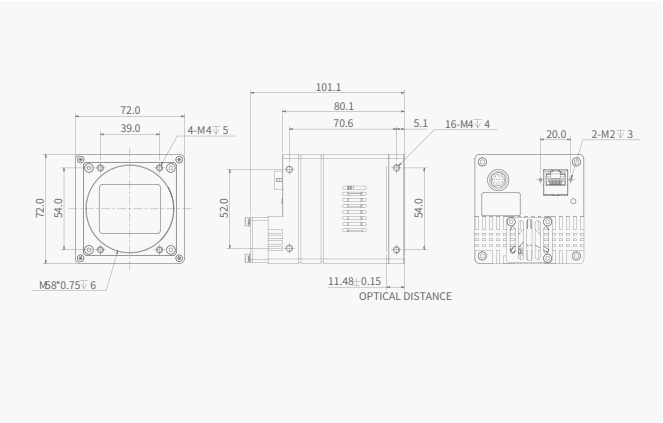

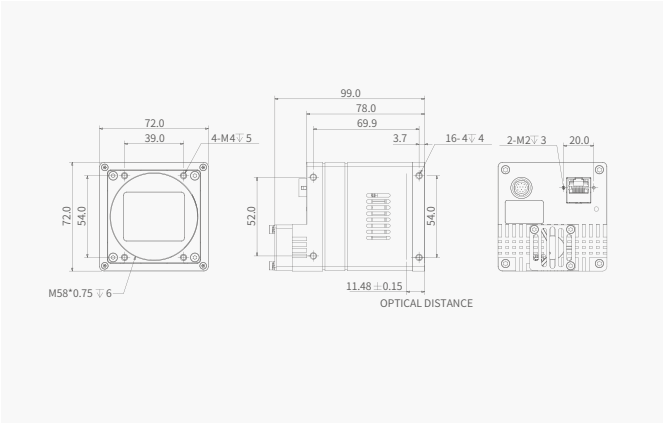

CameraLink

Model	Resolution	FPS	Bit Depth	Interface	Sensor						Dimension (mm)	Lens Mount	Recommended Lens
					Model	Type	Pixel Size (μm)	Size	Shutter	Mono/ Color			
AX7C10M/CK250E	6240×4848	24.8	10	Camera Link	IMX342	CMOS	3.45×3.45	22.3×16.7	Global	M/C	72×72×64.1	M58 (FBL 11.48)	F32-5035-M43
AX5E07M/CK250E	9280×4992	17.5	12	Camera Link	Customize	CMOS	3.2×3.2	29.9×16.0	Global	M/C	72×72×64.8	M58 (FBL 11.48)	F46-6035-M58
AX5F57M/CK250E	9280×6992	12.5	12	CameraLink	GMAX3265	CMOS	3.2×3.2	29.9×22.4	Global	M/C	72×72×64.8	M58 (FBL 11.48)	F46-6035-M58
AX7Q00MK470E	14160×10640	5.1	12	Camera Link	IMX411	CMOS	3.76×3.76	53.4×40.0	Rolling	M	100×100×65.7	M72 (FBL 19.55)	F67-5545-M72

Dimensions (mm)

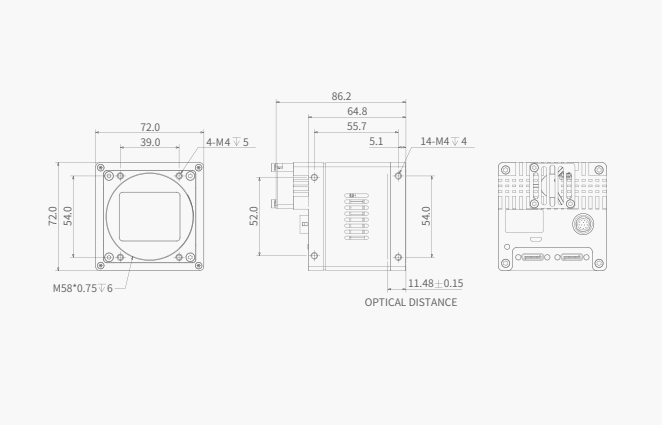

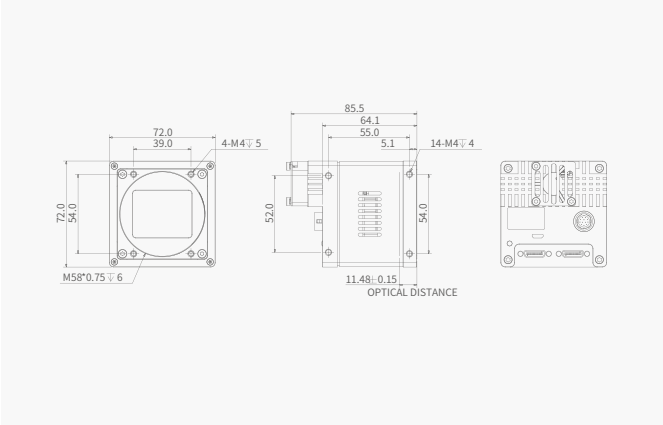

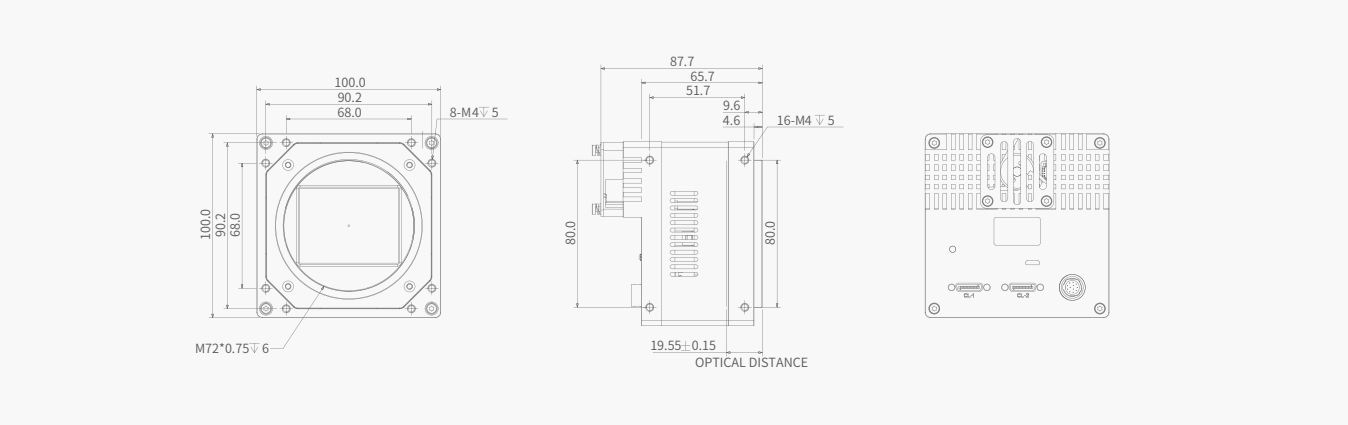

CoaXPress-6

Model	Resolution	FPS	Bit Depth	Interface	Sensor						Dimension (mm)	Lens Mount	Recommended Lens
					Model	Type	Pixel Size (μm)	Size	Shutter	Mono/ Color			
AX5A22M/CX050E	4096×3072	188	10	CoaXPress-6	CMV12000	CMOS	5.5×5.5	22.5×16.9	Global	M/C	72×72×72.1	M58 (FBL 11.48)	F32-5035-M43
AX5A22M/CX060E	4096×3072	188	10	CoaXPress-6	CMV12000	CMOS	5.5×5.5	22.5×16.9	Global	M/C	72×72×72.1	F	F32-5035-M43
AX5A22M/CX340E	4096×3072	188	10	CoaXPress-6	CMV12000	CMOS	5.5×5.5	22.5×16.9	Global	M/C	80×80×47.3	M42 (FBL 11.48)	F32-5035-M43
AX5E02M/CX150E	7920×6004	30	12	CoaXPress-6	CMV50000	CMOS	4.6×4.6	36.4×27.6	Global	M/C	72×72×91.1	M58 (FBL 11.48)	F46-6035-M58
A5E02M/CX160E	7920×6004	30	12	CoaXPress-6	CMV50000	CMOS	4.6×4.6	36.4×27.6	Global	M/C	72×72×91.1	F	F46-6035-M58
AX5E07M/CX250E	9344×5000	44	12	CoaXPress-6	Customize	CMOS	3.2×3.2	29.9×16.0	Global	M/C	72×72×69.8	M58 (FBL 11.48)	F46-6035-M58
AX5F57M/CX250E	9344×7000	31	12	CoaXPress-6	GMAX3265	CMOS	3.2×3.2	29.9×22.4	Global	M/C	72×72×69.8	M58 (FBL 11.48)	F46-6035-M58
AX7Q10M/CX470E	14192×10640	6.1	12	CoaXPress-6	IMX411	CMOS	3.76×3.76	53.4×40.0	Rolling	M/C	100×100×65.7	M72 (FBL 19.55)	F67-5545-M72
AX7Q10M/CX770E	14192×10640	6.1	12	CoaXPress-6	IMX411	CMOS	3.76×3.76	53.4×40.0	Rolling	M/C	100×100×100.1	M72 (FBL 19.55)	F67-5545-M72
*A9507MX703E	2592×2160	210	12	CoaXPress-6	GMAX2505	CMOS	2.5×2.5	6.5×5.4	Global	M	50×50×44.7	C	A9-6M
*A9907MX703E	4192×2160	120	12	CoaXPress-6	GMAX2509	CMOS	2.5×2.5	10.5×5.4	Global	M	50×50×44.7	C	MH-X
*A9A27MX703E	4096×3072	85	12	CoaXPress-6	Customized	CMOS	2.5×2.5	11.27×10.24	Global	M	50×50×44.8	C	MH-X
*A9A87MX703E	4496×4096	64	12	CoaXPress-6	GMAX2518	CMOS	2.5×2.5	11.27×10.24	Global	M	50×50×44.8	C	MH-X/MT-X
*A9B57M/CX703E	5120×5120	42	12	CoaXPress-6	GMAX0505	CMOS	2.5×2.5	1.1"	Global	M/C	50×50×45	C	MH-X/MT-X
A9B57M/CX250E	5120×5120	90	10	CoaXPress-6	GMAX0505	CMOS	2.5×2.5	1.1"	Global	M/C	72×72×78.7	M58 (FBL 11.48)	MT-X

Note: Models with Symbol "*" are latest-released products.

Dimensions (mm)

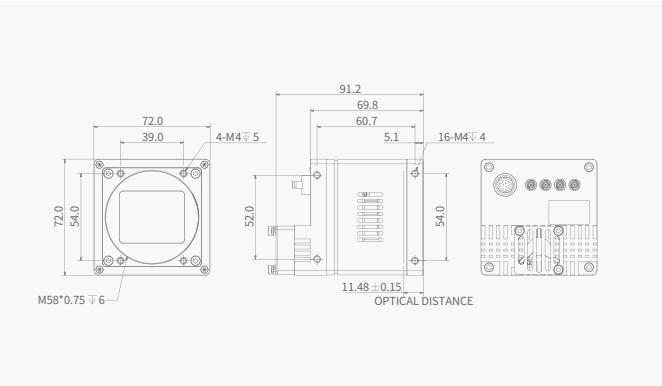

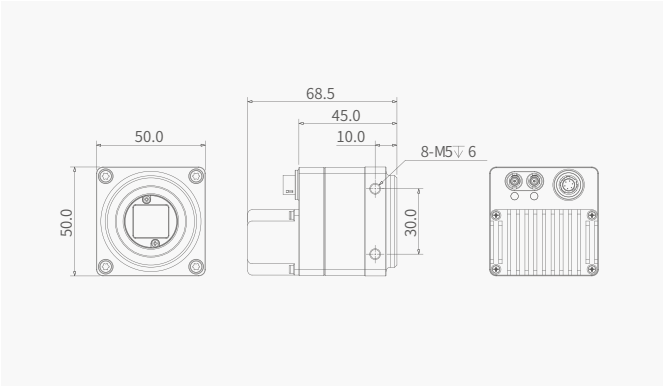

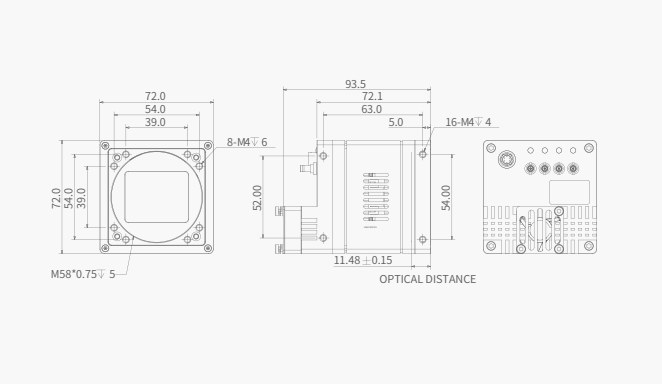

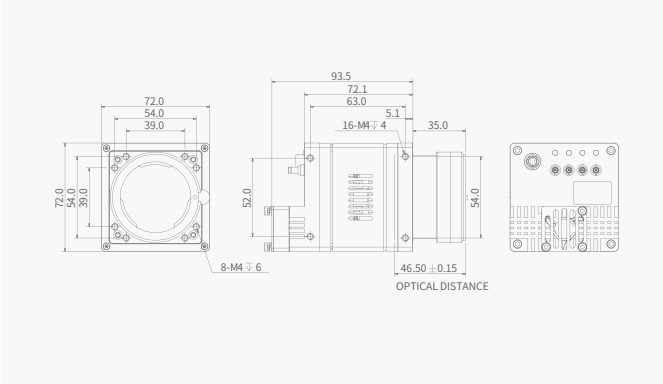

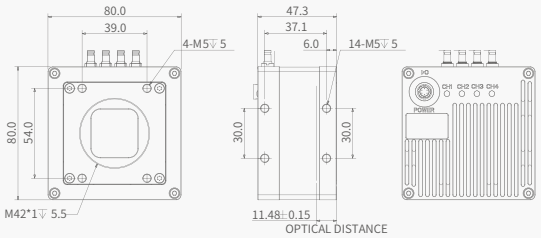
80.0
39.0
4-M5↧5
47.3
37.1
6.0
14-M5↧5
80.0
54.0
30.0
30.0
M42*1↧5.5
11.48±0.15
OPTICAL DISTANCE
I/O
POWER

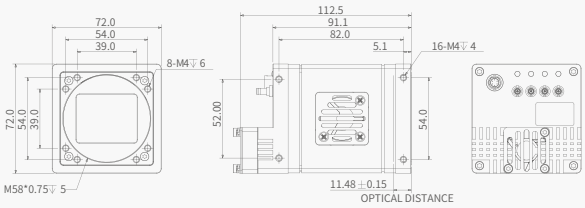
72.0
54.0
39.0
8-M4↧6
112.5
91.1
82.0
5.1
16-M4↧4
72.0
54.0
39.0
52.00
54.0
M58*0.75↧5
11.48±0.15
OPTICAL DISTANCE

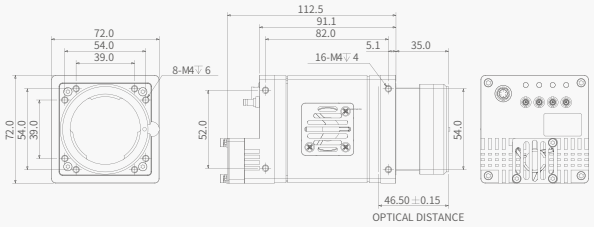
72.0
54.0
39.0
8-M4↧6
112.5
91.1
82.0
5.1
35.0
16-M4↧4
72.0
54.0
39.0
52.0
54.0
46.50±0.15
OPTICAL DISTANCE

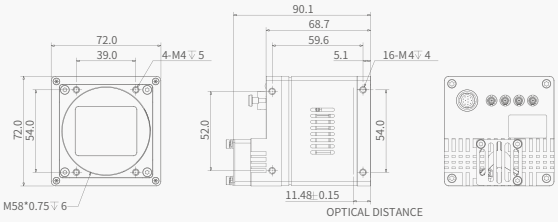
90.1
68.7
59.6
72.0
39.0
4-M4↧5
5.1
16-M4↧4
72.0
54.0
52.0
54.0
M58*0.75↧6
11.48±0.15
OPTICAL DISTANCE

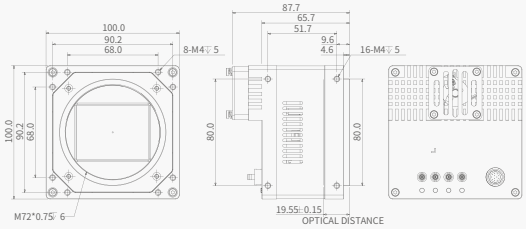
87.7
65.7
51.7
100.0
90.2
68.0
8-M4↧5
9.6
4.6
16-M4↧5
100.0
90.2
68.0
80.0
80.0
M72*0.75↧6
19.55±0.15
OPTICAL DISTANCE

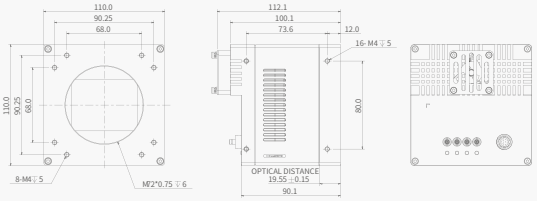
110.0
90.25
68.0
112.1
100.1
73.6
12.0
16-M4↧5
110.0
90.25
68.0
80.0
8-M4↧5
M72*0.75↧6
OPTICAL DISTANCE
19.55±0.15
90.1

CoaXPress-12

Model	Resolution	FPS	Bit Depth	Interface	Sensor						Dimension (mm)	Lens Mount	Recommended Lens
					Model	Type	Pixel Size (μm)	Size	Shutter	Mono/ Color			
AX5A22M/CP050E	4096×3072	330	12	CoaXPress-12	CMV12000	CMOS	5.5×5.5	22.5×16.9	Global	M/C	80×80×72.3	M58 (FBL 11.48)	F32-5035-M43
AX5B17MP050E	5120×4096	219	12	CoaXPress-12	GSPRINT4521	CMOS	4.5×4.5	23.0×18.4	Global	M	80×80×74.8	M58 (FBL 11.48)	F32-5035-M43
A9B57M/CP050E	5120×5120	150	10	CoaXPress-12	GMAX0505	CMOS	2.5×2.5	1.1"	Global	M/C	80×80×72.3	M58 (FBL 11.48)	MT-X
A9B57M/CP340E	5120×5120	150	10	CoaXPress-12	GMAX0505	CMOS	2.5×2.5	1.1"	Global	M/C	80×80×65	M42 (FBL 11.48)	MT-X
AX5E07M/CP050E	9344×5000	99	10	CoaXPress-12	Customized	CMOS	3.2×3.2	29.9×16.0	Global	M/C	80×80×73.4	M58 (FBL 11.48)	F46-6035-M58
AX5F57M/CP050E	9344×7000	71	10	CoaXPress-12	GMAX3265	CMOS	3.2×3.2	29.9×22.4	Global	M/C	80×80×73.4	M58 (FBL 11.48)	F46-6035-M58

Dimensions (mm)

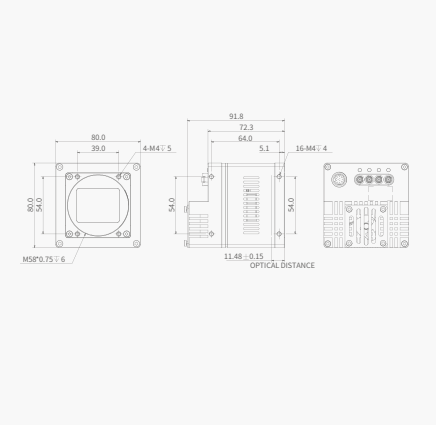

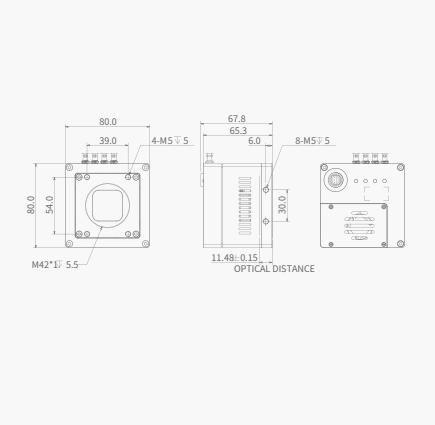

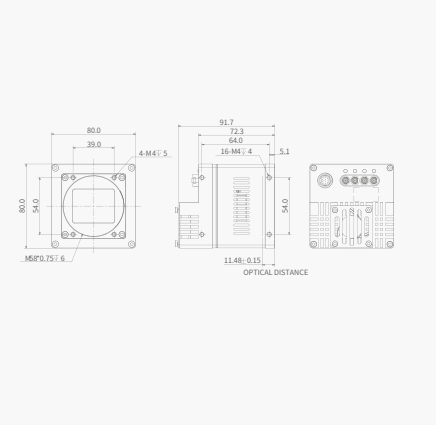

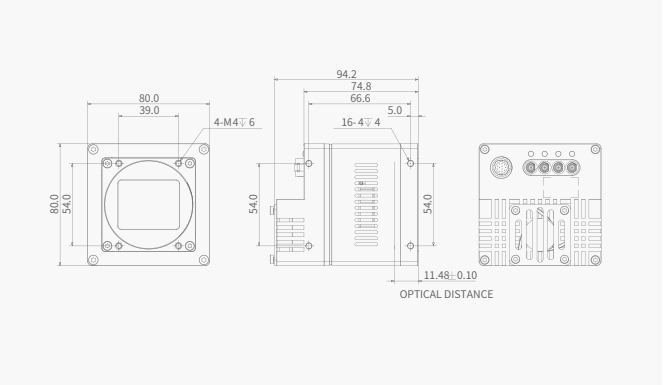

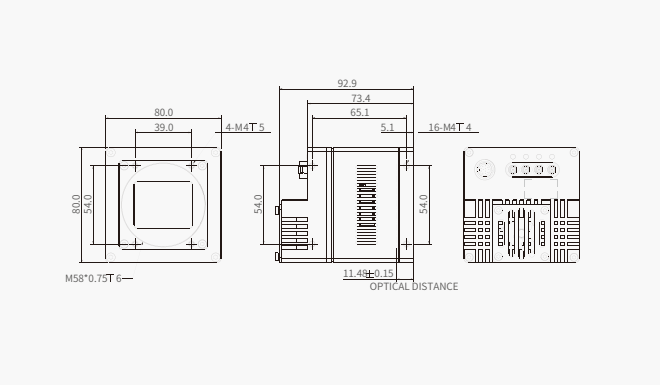

LINE SCAN CAMERAS

Excellently Designed Product

LINE SCAN CAMERAS

High Resolution & High Line Rate

- Resolution covers from 2k to 16k
- Interface contains GigE and CameraLink
- Abundant ISP algorithms such as PFN, LSC, CCM and more
- Lossless compression greatly increases the line rate for GigE model
- Dual scanning direction, flexible installation
- Support wide range power supply input

GigE

Model	Resolution	Line Rate (Hz)	Bit Depth	Interface	Sensor			Dimension (mm)	Lens Mount	Recommended Lens
					Type	Pixel Size (μm)	Mono/ Color			
*L5027MG400E	2048×4	59K	12	GigE	CMOS	7×7	M	29×44×58	C	MH-X/MT-X
L5027MG140E	2048×1	49K	12	GigE	CMOS	14×14	M	62×62×44	M42 (FB L 11.69)	F32-5035-M43
L5027CG140E	2048×2	49K	12	GigE	CMOS	14×14	C	62×62×44	M42 (FB L 11.69)	F32-5035-M43
L5022MG141E	2048×1	49K	12	GigE	CMOS	14×14	M	62×62×35.8	M42 (FBL 11.64)	F32-5035-M43
L5022CG141E	2048×2	49K	12	GigE	CMOS	14×14	C	62×62×35.8	M42 (FBL 11.64)	F32-5035-M43
L5047MG140E	4096×1	28K	12	GigE	CMOS	7×7	M	62×62×44	M42 (FBL 11.69)	F32-5035-M43
L5047CG140E	4096×2	28K	12	GigE	CMOS	7×7	C	62×62×44	M42 (FB L 11.69)	F32-5035-M43
L5042MG141E	4096×1	28K	12	GigE	CMOS	7×7	M	62×62×35.8	M42 (FBL 11.64)	F32-5035-M43
L5042CG141E	4096×2	28K	12	GigE	CMOS	7×7	C	62×62×35.8	M42 (FB L 11.64)	F32-5035-M43
L5082MG170E	8192×1	13K	12	GigE	CMOS	7×7	M	80×80×48	M72 (FBL 11.73)	--

Note: Models with Symbol "*" are latest-released products.

Dimensions (mm)

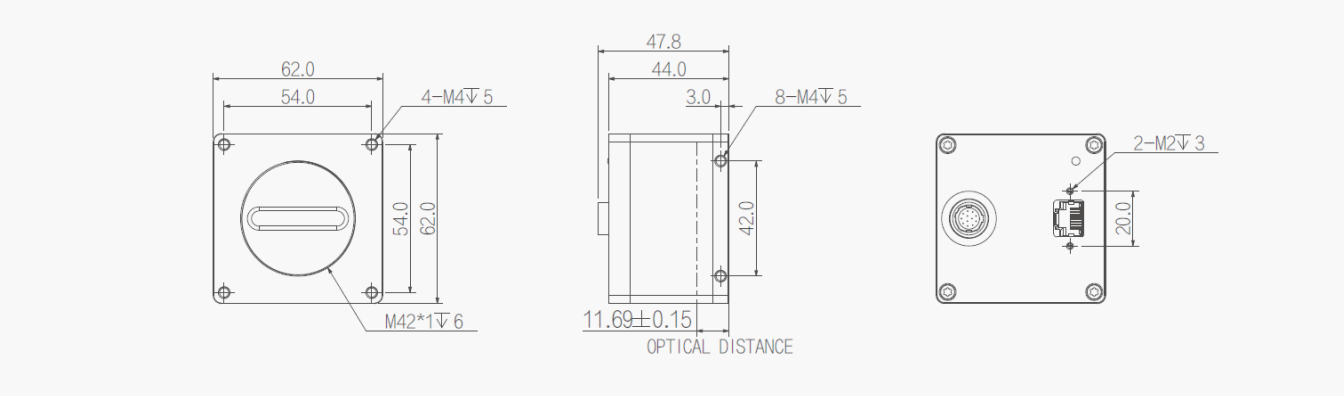

Dimensions (mm)

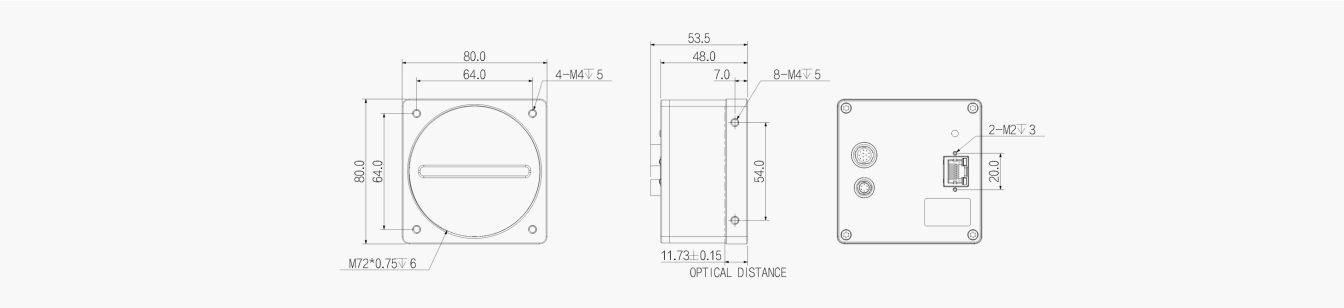

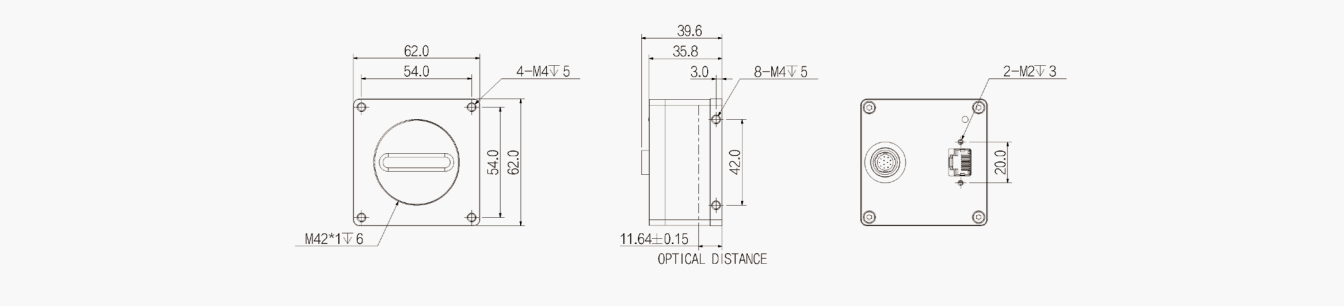

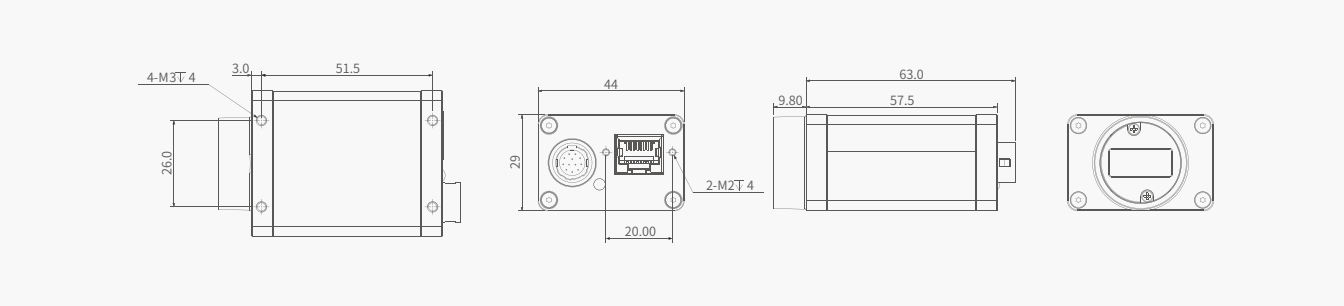

CameraLink

Model	Resolution	Line Rate (Hz)	Bit Depth	Interface	Sensor			Dimension (mm)	Lens Mount	Recommended Lens
					Type	Pixel Size (μm)	Mono/ Color			
L5047MK141E	4096×2	180K	12	CameraLink	CMOS	7×7	M	62×62×33.68	M42 (FBL 11.69)	F32-5035-M43
L5047CK141E	4096×2	90K	12	CameraLink	CMOS	7×7	C	62×62×33.68	M42 (FBL 11.69)	F32-5035-M43
L5087MK470E	8192×4	100K	10	Cameralink	CMOS	5×5	M	80×80×57.8	M72 (FBL 12)	--
L5087CK670E	8192×6	34K	10	CameraLink	CMOS	5×5	C	80×80×57.8	M72 (FBL 12)	--
L5082MK170E	8192×1	80k	12	CameraLink	CMOS	7×7	M	80×80×48	M72 (FBL 11.73)	--
L5162MK170E	16384×1	50K	12	CameraLink	CMOS	3.5×3.5	M	80×80×39.5	M72 (FB L12)	--

Dimensions (mm)

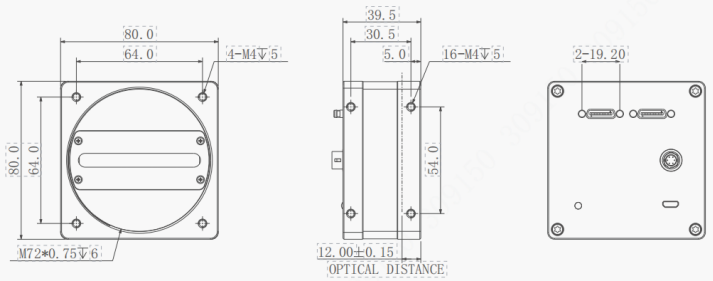

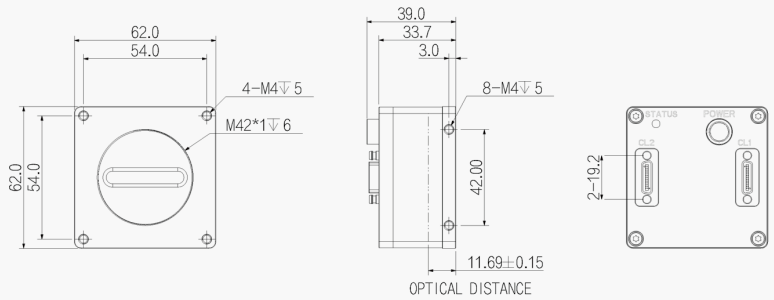

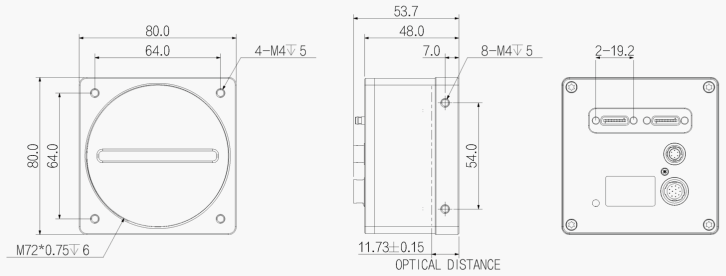

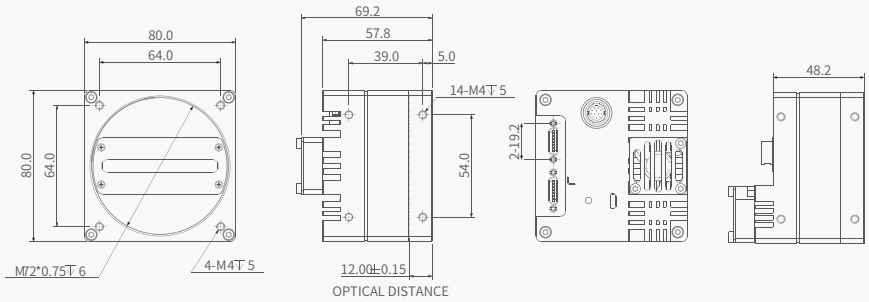

X86 SMART CAMERAS

Smart & Open

X86 SMART CAMERAS

High Scalability and Practicality

- Support VGA/USB interface and extended keyboard/mouse connection
- CMOS series product covering 5MP~20.0MP resolution
- 4G RAM& 64G SSD
- Support software trigger/hardware trigger/free run mode
- Support RS232 or RS485, 3 Opto-isolated inputs and 3 Opto-isolated outputs
- Support C mount and optional built-in illumination
- Industrial-grade MI2 connector, IP67 protection level
- DC 12~26V wide range of power supply which is suitable for DC12V/24V industrial environment
- Embedded self-developed algorithm platform to support different application scenarios

Specifications

Model	Resolution	FPS	Interface	Sensor					Dimension (mm)	Recommended Lens
				Type	Pixel size (μm)	Size	Shutter	Mono/ Color		
SI5500MG002E	2448×2048	35	GigE	CMOS	3.45×3.45	2/3"	Global	M	62×69×132.2	MK-M
SI5600MG002E	3072×2048	30	GigE	CMOS	2.4×2.4	1/1.8"	Rolling	M	62×69×132.2	A9-6M
SI5A20MG002E	4000×3000	20	GigE	CMOS	1.85×1.85	1/1.7"	Rolling	M	62×69×132.2	MK-M
SI5B00MG002E	5472×3648	21	GigE	CMOS	2.4×2.4	1"	Rolling	M	62×69×132.2	MT-X

Dimensions (mm)

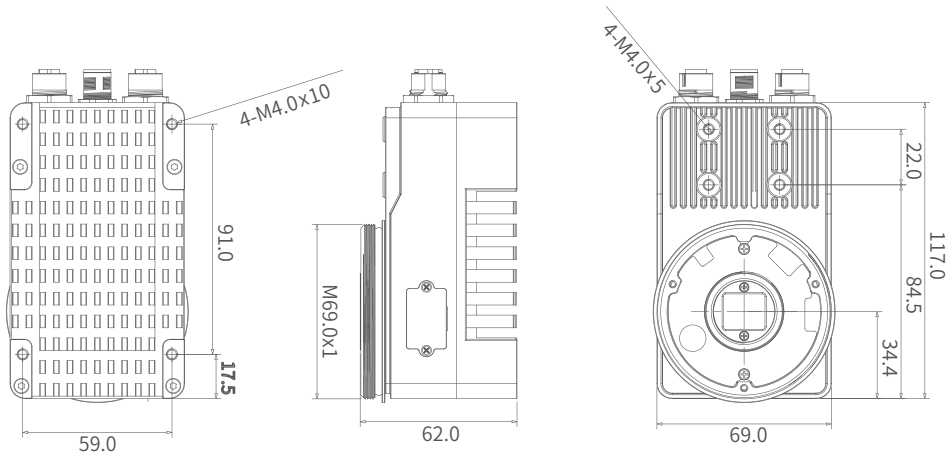

3D CAMERAS

Flexible & Powerful

3D LOGISTICS CAMERA

Large FOV & High Speed

- Pre-calibration during production and support high speed output 3D measurement in mm-level
- Configurable working distance and FOV
- Integrated with 3D calibration kits
- Maximum Scale: 1000mm×1000mm×2000mm (W×H×L)
- High accurate 3D measurement: 5mm×5mm×5mm
- Output point cloud image and volume measurement data
- Abundant interfaces including GigE/Input & Output/Encoder
- Industrial level M12 connector, IP65 protection level
- Support wide-range power supply
- Directly output volume data without PC

Specifications

Model	Near FOV (mm)	Far FOV (mm)	Precision (mm³)	Working Distance (mm)	Scale (mm)	Laser Grade	Dimension (mm)
D5201MG100E	1000	2200	±5mm@1m	1000~1800	1000	3B	370×65.6×150

Dimensions (mm)

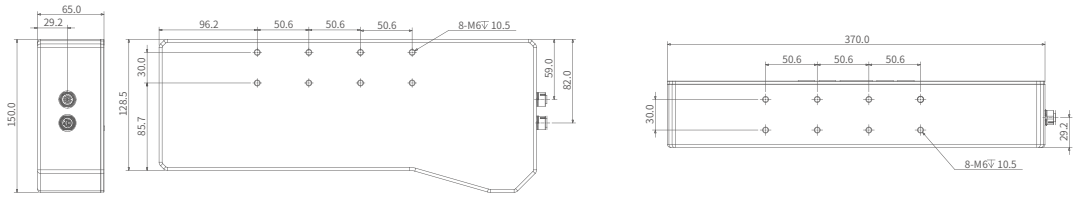

Connector Pin-out

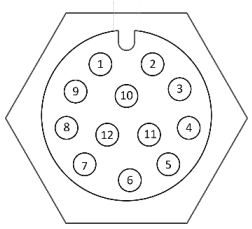

Port Definitions of 12-pin Signals

Pin	Color	Signal	Descripition
1	Yellow	TRIG +	Differential Input+/Non-isolated Single-end Input
2	Yellow White	TRIG -	Differential Input-
3	Brown	OPT_OUT1	Isolated Single-end Output 1
4	Brown White	OPT_OUT2	Isolated Single-end Output2
5	Purple	RXD	Serial Receive
6	Purple White	OPT_IN_GND	Isolated Single-end Input GND
7	Red	POWER	Power Supply DC12~24V
8	Black	POWER_GND	Power Supply GND
9	Green	OPT_OUT_GND	Isolated Single-end Output GND
10	Orange	OPT_INO	Isolated Single-end Input
11	Blue	GND	Non-isolated Input GND
12	Gray	TXD	Serial Send
Shield	White	--	Shield GND

3D STEREO CAMERA

Built-in Algorithm, Excellent Performance

- Built-in high-precision measurement algorithm, high measurement accuracy
- Small installation space, highly integrated, cost-effective
- Uniform and reliable speckle laser module
- Superior optical filter design, strong resistance to ambient light
- Built-in aviation plug, abundant I/O interfaces
- 4 indicator lights for debugging and status monitoring
- Industrial level M12 connector, IP65 protection level
- Support multi-camera cascade

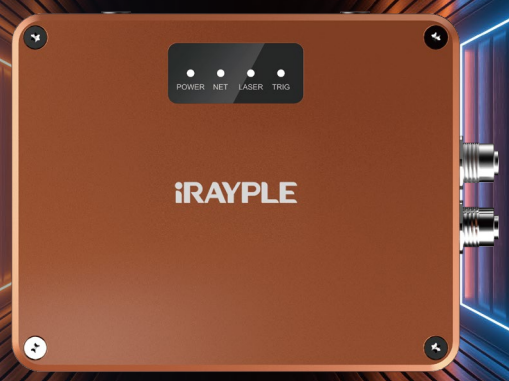

Specifications

Model	Near FOV (mm)	Far FOV (mm)	Precision (mm³)	Working Distance (mm)	Laser Grade	Interface
DS5131MG30CE	590×540	3880×3190	±5mm@1m	600~3500	Class 1	GigE

Dimensions (mm)

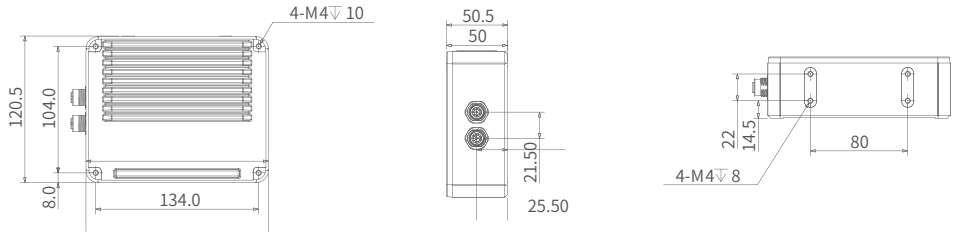

Connector Pin-out

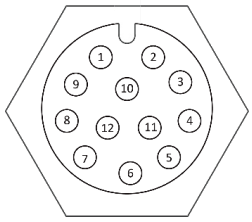

Port Definitions of 12-pin Signals

Pin	Signal	Description
1	DIFF+	Differential Input+
2	DIFF-	Differential Output-
3	SIGNAL_GND	Signal GND
4	OPT_IN1	Opto Input 1
5	COM_RXD	Serial Receive
6	OPT_IN_GND	Opto Input GND
7	POWER	Power Supply
8	POWER_GND	Power GND
9	OPT_OUT_GND	Opto Output GND
10	OPT_IN2	Opto Input2
11	OPT_OUT	Opto Output
12	COM_TXD	Serial Send
Sheild	SGND	Sheild GND

FRAME GRABBER & EXPANSION CARD

Built-in Algorithm, Excellent Performance

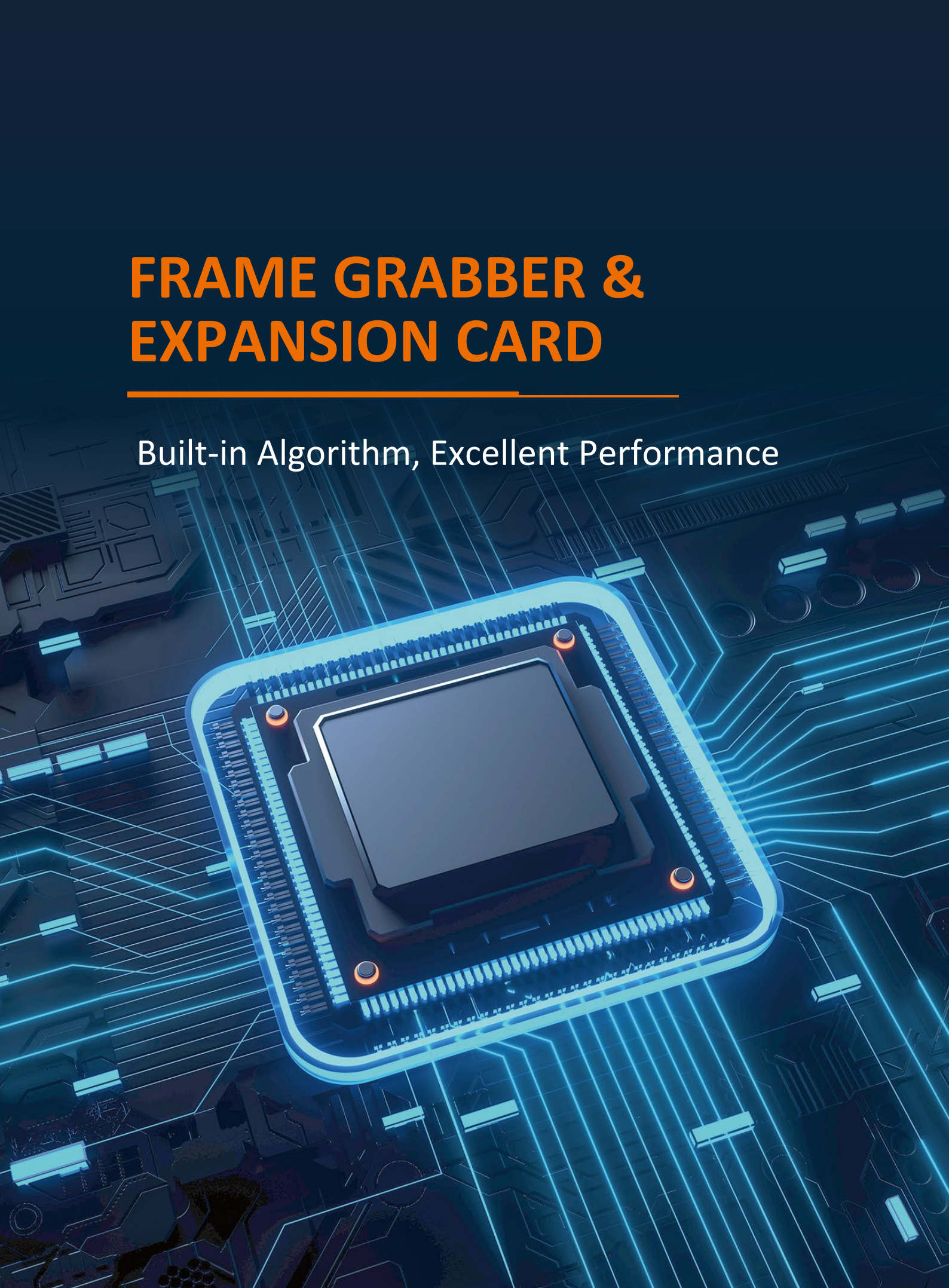

4-CHANNEL GIGE EXPANSION CARD

GE-5G40E

- Support 4×2.5Gbps ports with a maximum transmission distance of up to 100m
- Support POE power supply, single channel supports 8W, 4 channels can provide up to 26W in total
- Port status indicator, real-time feedback of the POE status of the network port
- Conform to CE, FCC, RoHS standards

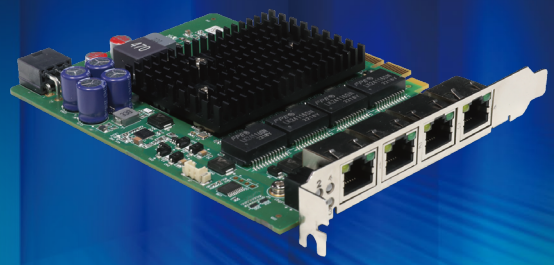

Specifications

Model	GE-5G40E
Host Interface	1 PCIe GEN2×4 lanes
Channel Indicator	4
Camera Interface Standard	GigE Vision
Connector	4×RJ45
Power Output	POE, A Single Channel Supports A Maximum Output of 8W, and A Total of 4 Channels Can Output A Maximum of 26W
Supported Camera Types	GigE Port Industrial Camera, 2.5GigE Port Industrial Camera
Number of Supported Cameras	4
Camera Interface Rate	100Mbps, 1Gbps, 2.5Gbps
Operating System	Windows7/10 64bits, Linux, Ubuntu
Certifications	CE, UKCA, KC
Dimensions	151x111x21.6mm
Net Weight	182g
Power Supply	ATX 6pin Connector
Power Consumption	3.6W (without POE Power Supply)
Operating Temperature	0~50°
Operating Humidity	10%~95% RH Non-condensing

Dimensions (mm)

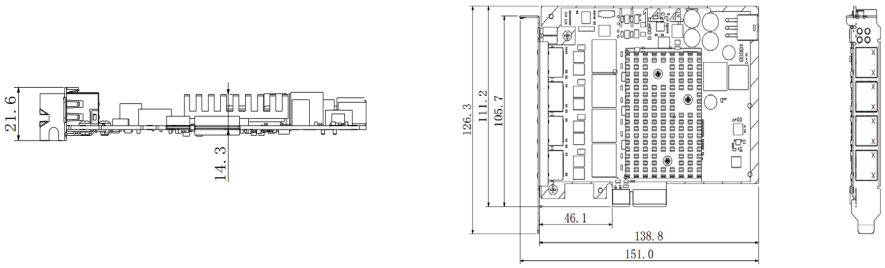

4-CHANNEL USB3.0 EXPANSION CARD

GU3-5U41RE

- Support super-speed transmission
- Backward compatible with USB2.0 mode
- USB3.0 Type-A interface with 4 independent channels
- Suitable for PCIe2 4, 8, 16 lanes and other host card slots
- The theoretical maximum transmission rate can reach 5Gbps

Specifications

Model	GU3-5U41RE
Bus	PCIe Gen 2×4 Lanes
Interface Standard	USB3.0 Type-A
Power Output	5V@900mA, 4.5W
Supported Camera Type	USB Interface Industrial Camera
Number of Ports	4
Interface Rate	Single Port Rate up to 2.9Gbps
Operating Temperature	0~50°C
Operating Humidity	10%~95%RH (Non-condensing)
Dimensions	120.8mm×111.2mm×21.6mm
Net Weight	92g
Power Supply	Host internal SATA Power Interface 12V Power Supply
Power Consumption	＜25W
Cooling Method	Natural Cooling
Operating System	Windows 7/10/11,Linux
Certifications	CE, UKCA, KC

Dimensions (mm)

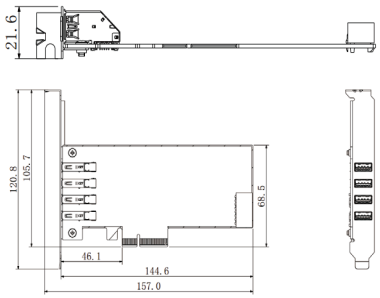

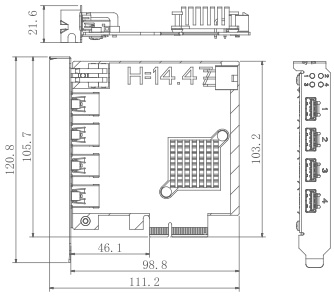

CAMERALINK FRAME GRABBER

GCL-5F20E

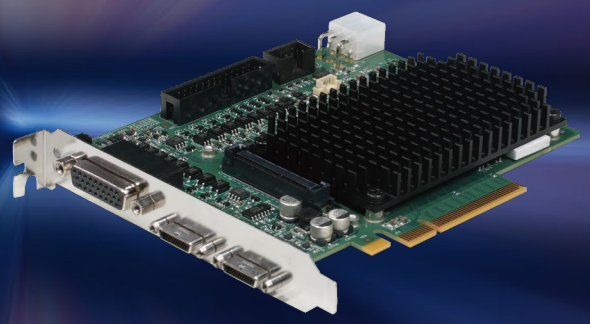

- Support 20~85MHz pixel clock
- Support Base/Medium/Full/80-bit modes
- Support multiple IO interfaces
- Provide SDK, GenTL protocol, easy for secondary development
- Conform to GenIcam protocol standard
- Support CameraLink 2.0 protocol, rate up to 6.8Gbps

Specifications

Model	GCL-5F20E*
Transfer Mode	Base, Medium, Full, 80-bit
Pixel Clock	20MHz~85MHz
Transmission Rate	850MB/s
Interface Standard	Camera Link 2.0
TAP	1/2/3/4/8/10 Taps
Onboard Memory	1GB
Bus Interface	PCIe Gen2×8 Lanes
Bus Interface Speed	5GT/s
Connector	2×SDR
Number of Supported Cameras	Maximum 2
Pixel Format	Mono 8/10/12, Baver 8/10/12, RGB8
I/O Interface	2 Differential Signal Input, 4 Opto-isolated Digital Input, 4 Opto-isolated Digital Output
Connector	26-core 3-row High-density Sub-D Female Connector
Power Output	Non-isolated +5V, 1A and +12V, 1A
Power Consumption	8W (Excluding PoCL)
Dimension	151.1mm×126.3mm×21.6mm
Net Weight	177.1g
Temperature	Operating Temperature: 0~50°C, Storage Temperature: -20~70°C
Humidity	10%~90%RH Non-condensing
Certification	CE, UKCA, UL, KC
Software	MVviewer
System Requirements	Windows 7/8/10 (64 bit)

* Official Release in 2023 Q3

Dimensions (mm)

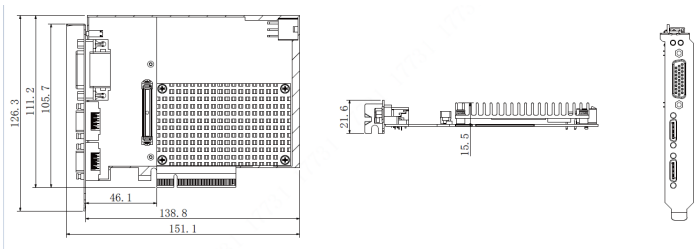

CXP-6 FRAME GRABBER

GX3-6D40

- Support up to 2 cameras connection
- Supports up to 3300 MB/s bus bandwidth
- Abundant panel and on board I/O lines
- Support multiple image formats

Specifications

Model	GX3-6D40*
Number of Channels	4 Channels, Support up to 2 Cameras Connected at the Same Time
Cache	2GB DDR4-2400
PCIe Bus	PCIe Gen3 × 4 Lanes, Supporting up to 3300 MB/s Bus Bandwidth
Protocol Standard	CoaXPress 1.1/2.0
Interface	CXP-6, 4 × DIN 1.0/2.3
Interface Rate	1.25/2.5/3.125/5/6.25Gbps (CXP-1/2/3/5/6)
GPIO	Panel IO: 2 x 42.0 Spacing Connector, 4 Opto-isolated Input On-board: 2 × 122.54 Spacing Connector, 4 Opto-isolated Input, 2 Opto-isolated Output, 2 TTL Input/Output
Supported Camera Types	CXP-6 Interface Industrial Camera
Indicators	4 full-color LEDs, which can display the corresponding DIN 1.0/2.3 interface status according to the CXP specification.
Power Supply	The frame grabber is powered by PCIE; The on-board 6 Pin PEG connector must be connected when powering the camera with the POCXP, provide a total power of up to 24W
Power Consumption	20W
Dimensions	167.5mm×68.9mm×21.6mm
Package Size	200mm×140mm×40mm
Net Weight	0.15kg
Fan Control	Report FPGA temperature and fan speed information, you can manually set the fan speed.
Cooling Method	Fan Cooling and Natural Cooling
Operating Temperature	0~50°C
Operating Humidity	10~90%RH (Non-condensing)
Storage Temperature	-20~60°C
Storage Humidity	10~90%RH (Non-condensing)
Operating System	Windows 10/11/Server 2019(x64)
Certifications	CE, UKCA, KC
Software	MVviewer
Development	GenTL, GenICam (Halcon is supported)
Pixel Format	Mono 8/10/12/16, Bayer 8/10/12/16, RGB 8/10/12/16, YCbCr 8/10/12/16 All formats in line with PFNC specifications are supported.

* Official Release in 2023 Q3

CXP-12 FRAME GRABBER

GX3-12HD40

- Support up to 4 cameras connection
- Support up to 6700MB/s bus bandwidth
- Abundant panel and on board I/O lines
- Support multiple image formats

Specifications

Model	GX3-12HD40*
Number of Channels	44 Channels, Up to 4 Cameras Connected at the Same Time
Cache	2GB DDR4-2400
PCIe Bus	PCIe Gen 3 × 8 lanes, up to 6700 MB/s bus bandwidth
Protocol Standard	CoaXPress 1.1/2.0
Interface	CXP-12, 4x HDBNC
Interface Rate	1.25/2.5/3.125/5/6.25/10/12.5Gbps (CXP-1/2/3/5/6/10/12)
GPIO	PanelO: 2 x 42.0 Spacing Connector, 4 Opto-isolated InputOn-board Expansion: 2x12 2.54 Spacing Connector, 4 0pto-isolated Input, 2 0pto-isolated Outputs, 2 TTL Input/0utput
Supported Camera Types	CXP-12 Interface Industrial Camera
Indicators	4 full-color LEDs, which can display the status of the corresponding Micro-BNC interface according to the CXP specification.
Power Supply	The frame grabber is powered by PCIE; The on-board 6 Pin PEG connector must be connected when powering the camera with the POCXP, provide a total power of up to 24W.
Power Consumption	12.2W (Excluding PoCXP)
Dimensions	167.5mm×68.9mm×21.6mm
Package Size	220mm×150mm×60mm
Net Weight	0.15kg
Fan Control	Report FPGA temperature and fan speed information, you can manually set the fan speed.
Cooling Method	Fan Cooling and Natural Cooling
Operating Temperature	0~50°C
Operating Humidity	10~90%RH (Non-condensing)
Storage Temperature	-20~60°C
Storage Humidity	10~90%RH (Non-condensing)
Operating System	Windows 10/11/Server 2019 (64 bit)
Certifications	CE, UKCA, KC
Software	MVviewer
Development	GenTL, GenlCam (Halcon is supported)
Pixel Format	Mono 8/10/12/16, Bayer 8/10/12/16, RGB 8/10/12/16, YCbCr 8/10/12/16 All formats in line with PFNC specifications are supported.

* Official Release in 2023 Q3

LENS

Comprehensive & Reliable

A9-6MP SERIES (1/1.8''6MP)

- Support up to 1/1.8"camera sensors
- 6 models,focal lens covering from 8mm-50mm
- Ultra high resolution for full 6MP camera in full of view, matching 2.4um pixel size
- Ultra low distortion,chromatic color aberration design
- Compact design,easy for integration and installation
- Stable sharpness quality when temperature varies from -20°C~50°C

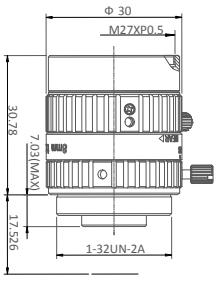

A9-0828-6MP

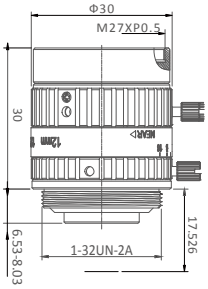

A9-1228-6MP

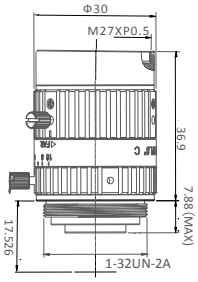

A9-1628-6MP

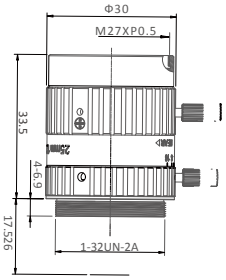

A9-2528-6MP

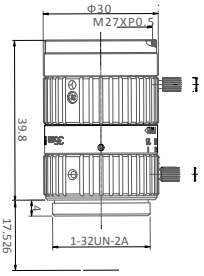

A9-3528-6MP

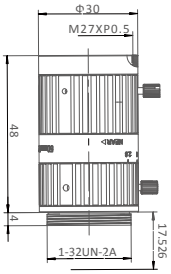

A9-5028-6MP

Model		A9-0828-6MP	A9-1228-6MP	A9-1628-6MP	A9-2528-6MP	A9-3528-6MP	A9-5028-6MP
Focal Length		8mm	12mm	16mm	25mm	35mm	50mm
Image Circle		Φ9.4mm	Φ9.4mm	Φ9.4mm	Φ9.4mm	Φ9.4mm	Φ9.4mm
F#		F2.8 - 16	F2.8 - 16	F2.8 - 16	F2.8 - 16	F2.8 - 16	F2.8 - 16
Angle of View	1/1.8'' (7.37×4.9mm)	58.94°×50.37°×34.81°	42.9°×35.5°×23.7°	31.3°×25.9°×17.2°	20.7°×17.25°×11.55°	15.2°×12.6°×8.3°	10.05°×8.37°×5.58°
	1/2'' (6.4mm×4.8mm)	54.06°×44.4°×34.04°	37.13°×30.08°×22.8°	28.05°×22.6°×17.05°	18.7°×15°×11.28°	13.46°×10.78°×8.1°	9.07°×7.27°×5.45°
Working Distance		0.1m to inf	0.1m to inf	0.1m to inf	0.15m to inf	0.2m to inf	0.25m to inf
TV Distortion		- 0.28%	- 0.10%	- 0.08%	- 0.02%	- 0.10%	0.12%
Relative Illumination	F2.8	80%	78%	85%	92%	95%	90%
	F4.0	90%	92%	95%	92%	95%	95%
Mount		C- Mount	C- Mount	C- Mount	C- Mount	C- Mount	C- Mount
Dimensions		35.4mm×Φ30mm	30mm×Φ30mm	36.9mm×Φ30mm	33.5×Φ30mm	39.8×Φ30mm	48mm×Φ30mm
Filter Thread		M27×P0.5	M27×P0.5	M27×P0.5	M27×P0.5	M27×P0.5	M27×P0.5
Weight		45g	48g	56g	47g	60g	67g
Working Temperature		-20°C~50°C	-20°C~50°C	-20°C~50°C	-20°C~50°C	-20°C~50°C	-20°C~50°C

MK-M SERIES (2/3''10MP)

- Support up to 2/3"camera sensors
- High resolution for 10MP camera in full of view
- Ultra low distorion
- Small size structure suitable for system integration and installation
- Stable sharpness quality when temperature varies from -20°C~50°C

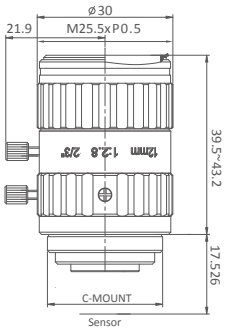

MK1228M

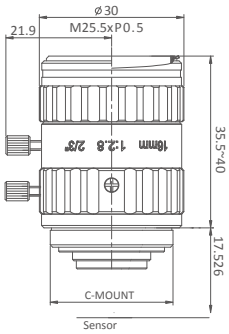

MK1628M

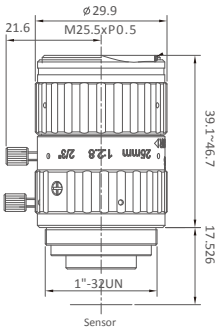

MK2528M

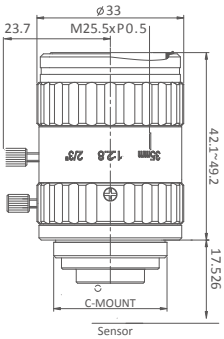

MK3528M

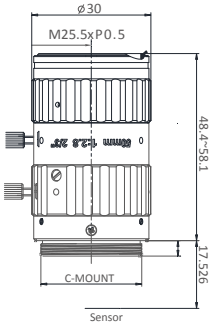

MK5028M

Model		MK1228M	MK1628M	MK2528M	MK3528M	MK5028M
Focal Length		12mm	16mm	25mm	35mm	50mm
Image Circle		Φ11.4mm	Φ11.4mm	Φ11.4mm	Φ11.4mm	Φ11.4mm
F#		F2.8 - 16	F2.8 - 16	F2.8 - 16	F2.8 - 16	F2.8 - 16
Angle of View	2/3''(Φ11mm)	49.2°×40.2°×30.8°	37.9°×30.8°×23.3°	24.8°×20.0°×15.0°	17.9°×14.3°×10.8°	12.6°×10.1°×6.4°
	1/2''(Φ8mm)	36.9°×29.9°×22.6°	31.2°×25.3°×18.9°	18.2°×14.6°×11.0°	13.0°×10.4°×7.8°	7.8°×6.4°×4.3°
Working Distance		0.1m to inf	0.1m to inf	0.15m to inf	0.2m to inf	0.2m to inf
TV Distortion		- 0.20%	- 0.20%	- 0.30%	0.07%	-0.08%
Relative Illumination	F2.8	64%	63%	75%	73%	89%
	F4.0	84%	88%	95%	96%	97%
Mount		C- Mount	C- Mount	C- Mount	C- Mount	C- Mount
Dimensions		43.2mm×Φ30mm	40mm×Φ30mm	46.7mm×Φ30mm	49.2mm×Φ33mm	60mm×Φ30mm
Filter Thread		M25.5×P0.5	M25.5×P0.5	M25.5×P0.5	M25.5×P0.5	M25.5×P0.5
Weight		70g	58g	66g	99g	98g
Working Temperature		-20°C~50°C	-20°C~50°C	-20°C~50°C	-20°C~50°C	-20°C~50°C

MH-X SERIES (1.1"12MP)

- Support up to 1.1"camera sensors (17.6mm)
- 5models, focal length covering from 12mm to 50mm
- High resolution for 12MP camera in full of view, matching 3.45um pixel size
- Ultra low distorion, TV distortion less than 0.5%
- Stable sharpness quality when temperature varies from -20°C~50°C

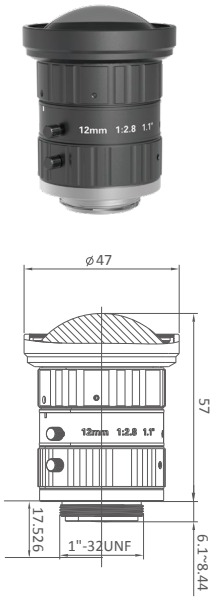

MH1228X

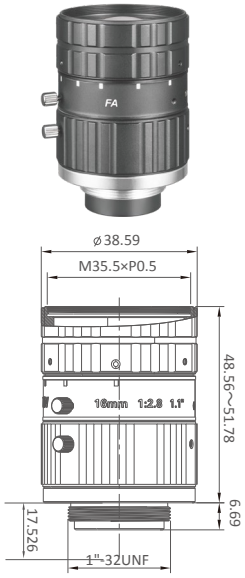

MH1628X

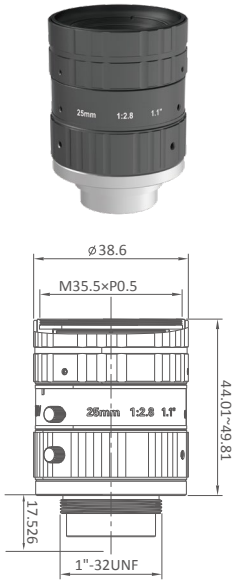

MH2528X

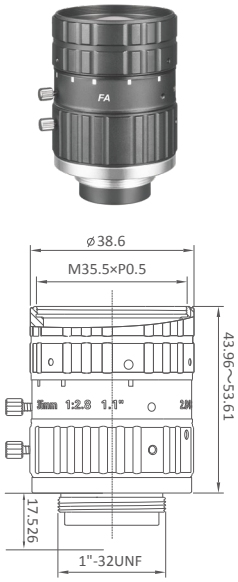

MH3528X

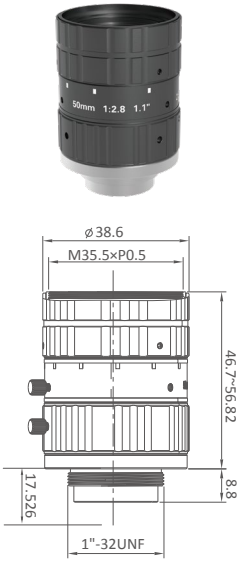

MH5028X

Model		MH1228X	MH1628X	MH2528X	MH3528X	MH5028X
Focal Length		12.4mm	16mm	25mm	35mm	50mm
Image Circle		Φ17.6mm	Φ17.6mm	Φ17.6mm	Φ17.6mm	Φ17.6mm
F#		F2.8 -F16	F2.8 - 16	F2.8 - F16	F2.8 - 16	F2.8 - F16
Angle of View	1.1" (14.08mm×10.56mm)	70.5°×59.8°×46.3°	57.8°×47.6°×36.5°	37.3°×30.4°×23°	26.7°×21.4°×15.9°	18.4°×14.8°×11.2°
	1" (12.44mm×9.83mm)	65.7°×53.5°×43.3°	52.8°×42.5°×34.1°	33.9°×26.9°×21.4°	24.1°×18.9°×15.1°	16.7°×13.2°×10.5°
Working Distance		0.1m to inf	0.1m to inf	0.15m to inf	0.2m to inf	0.3m to inf
TV Distortion		- 0.22%	- 0.18%	- 0.20%	- 0.02%	- 0.02%
Relative Illumination	F2.8	65%	70%	60%	80%	70%
	F4.0	81%	80%	90%	90%	95%
Mount		C- Mount	C- Mount	C- Mount	C- Mount	C- Mount
Dimension		56.99mm×Φ47mm	51.78mm×Φ38.59mm	49.81mm×Φ38.6mm	53.61mm×Φ38.6mm	56.82mm×Φ38.6mm
Filter Thread		No	M35.5×P0.5	M35.5×P0.5	M35.5×P0.5	M35.5×P0.5
Weight		186g	180g	133g	136g	134g
Working Temperature		-20°C~50°C	-20°C~50°C	-20°C~50°C	-20°C~50°C	-20°C~50°C

MT-X SERIES (1.1''25MP)

- Support up to 1.1"camera sensors (ϕ17.6mm)
- High resolution for 20MP camera in full of view, matching 2.4μm pixel size
- Ultra low distorion, TV distortion less than 0.1%
- Stable sharpness quality when temperature varies from -20°C~50°C

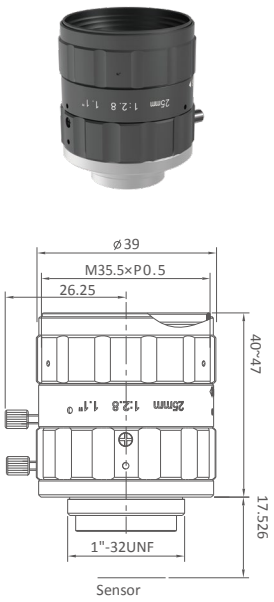

MT2528X

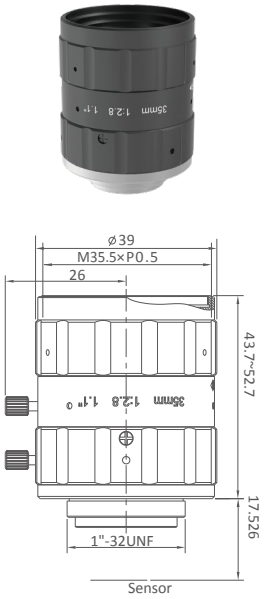

MT3528X

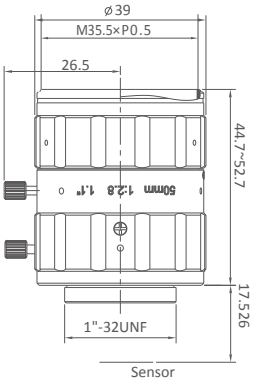

MT5028X

Model		MT2528X	MT3528X	MT5028X
Effective Length		25mm	35mm	50mm
Image Circle		Φ17.6mm	Φ17.6mm	Φ17.6mm
F#		F2.8 - F16	F2.8 - 16	F2.8 - F16
Angle of View	1.1'' (14.08mm×10.56mm)	38.8°×34.7°×23.5°	28.2°×22.9°×16.9°	20.0°×16.2°×11.9°
	1'' (12.44mm×9.83mm)	35.5°×28.7°×21.7°	25.8°×20.7°×15.6°	18.2°×14.6°×11.0°
Working Distance		0.15m to inf	0.2m to inf	0.25m to inf
TV Distortion		- 0.02%	- 0.07%	0.07%
Relative Illumination	F2.8	82%	93%	92%
	F4.0	82%	92%	98%
Mount		C- Mount	C- Mount	C- Mount
Dimensions		47mm×Φ39mm	52.7mm×Φ39mm	52.7mm×Φ39mm
Filter Thread		M35.5×P0.5	M35.5×P0.5	M35.5×P0.5
Weight		124g	125g	117g
Working Temperature		-20°C~50°C	-20°C~50°C	-20°C~50°C

MH-K SERIES (4/3''10MP)

- Support up to 4/3 " camera sensors
- 6 models,focal length covering from 8.5mm to 50mm
- High resolution for 10MP camera in full of view, matching 4.5µm pixel size
- Low distorion,F2.0 large aperture
- Stable sharpness quality when temperature varies from -20°C~50°C

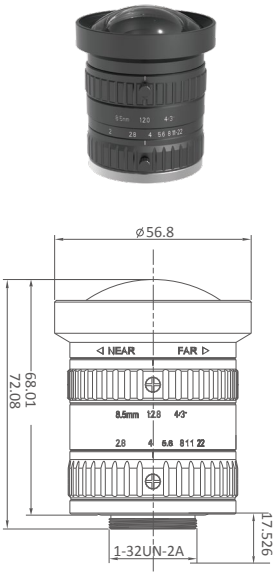

MH08528K

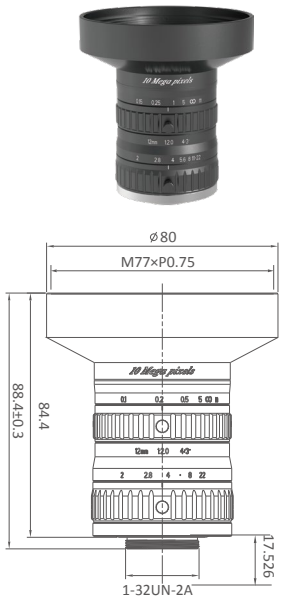

MH1220K

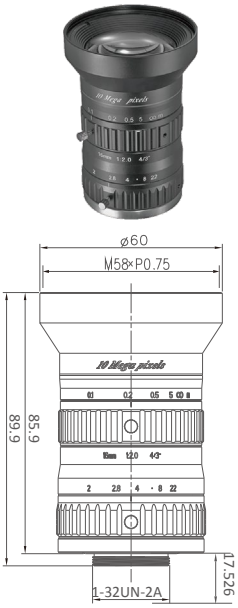

MH1620K

Model		MH08528K	MH1220K	MH1620K
Focuns Length		8.5mm	12mm	16mm
Image Circle		Φ23mm	Φ23mm	Φ23mm
F#		F2.8 - F22	F2.0 - F22	F2.0 - F22
Angle of View	4/3'' (Φ23mm)	107.4°×94.9°×80.1°	89.0°×75.5°×61.1°	72.9°×60.9°×47.3°
	1'' (Φ16mm)	86.6°×73.6°×58.1°	68.9°×57.3°×44.2°	54°×44.2°×33.6°
Working Distance		0.5m to inf	0.15m to inf	0.1m to inf
TV Distortion		-0.94%	0.04%	-1.27%
Relative Illumination	Full Aperture	38%	43%	43%
	F4.0	43%	71%	75%
Mount		C- Mount	C- Mount	C- Mount
Dimensions		72.1mm×Φ56.8mm	84.4mm×Φ80mm	85.9mm×Φ60mm
Filter Thread		No	M77×P0.75	M58×P0.75
Weight		317g	447g	338g
Working Temperature		-20°C~50°C	-20°C~50°C	-20°C~50°C

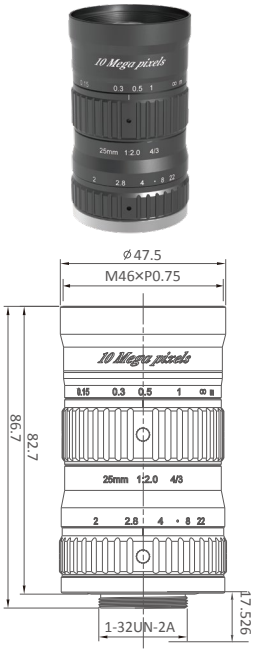

MH2520K

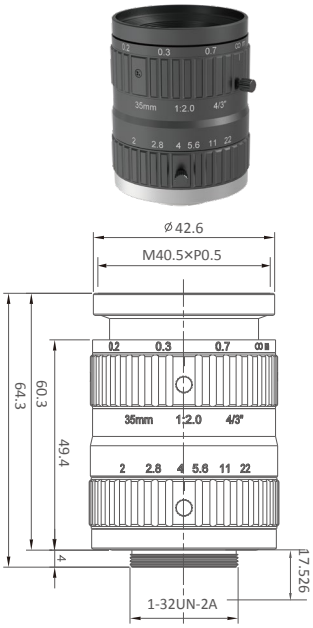

MH3520K

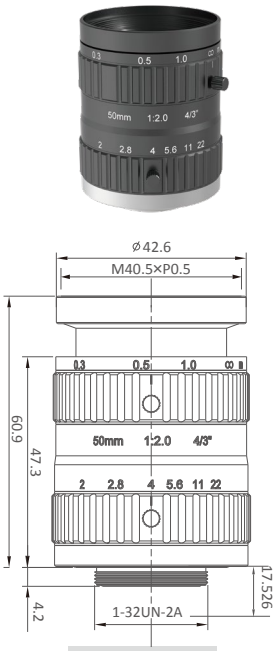

MH5020K

Model		MH2520K	MH3520K	MH5020K
Focus Length		25mm	35mm	50mm
Image Circle		Φ23mm	Φ23mm	Φ23mm
F#		F2.0 - F22	F2.0 - F22	F2.0 - F22
Angle of View	4/3'' (Φ23mm)	49.7°×40.6°×31°	36.6°×29.6°×22.4°	25.9°×20.9°×15.7°
	1'' (Φ16mm)	35.7°×28.8°×21.8°	25.9°×20.8°×15.7°	18.2°×14.6°×11.0°
Working Distance		0.15m to inf	0.2m to inf	0.3m to inf
TV Distortion		-0.25%	-0.22%	-0.11%
Relative Illumination	F2.0	38%	45%	50%
	F4.0	75%	76%	90%
Mount		C- Mount	C- Mount	C- Mount
Dimensions		82.7mm×Φ47.5mm	64.3mm×Φ44.6mm	60.9mm×Φ42.6mm
Filter Thread		M46×P0.75	M40.5×P0.5	M40.5×P0.5
Weight		251g	173g	170g
Working Temperature		-20°C~50°C	-20°C~50°C	-20°C~50°C

MH7532M (2/3''-75MM SHORT WD LENS)

- Support up to 2/3"camera sensors
- Ultra high resolution, 8MP resolution in full of view, matching up to 2.4um pixel size
- Magnification coverage 0.17~1
- Ultra low distortion,optimized chromatic aberration design
- Anti-seismic rate 3M7, meet precision position andent measurem application
- Stable sharpness quality when temperature varies from -20°C~50°C

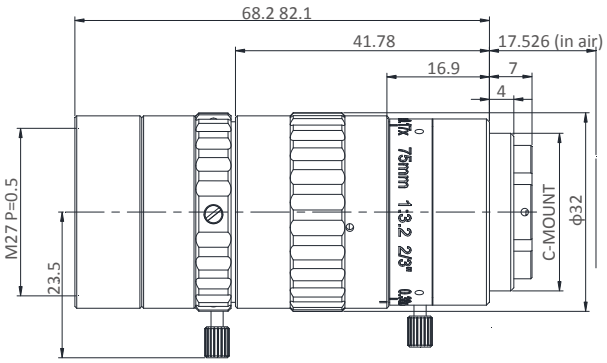

MH7532M

Model		MH7532M
Fcuos Length		75mm
Image Circle		Φ11.4mm (2/3")
F#		F3.2 - F16
Angle of View	2/3", 0.18x	47.2×39.4mm
	2/3", 0.38x	22.4×18.6mm
Working Distance		0.15m to 0.5m
TV Distortion		0.07%
Relative Illumination	F3.2	85%
	F4.0	95%
Mount		C-Mount
Dimensions		82.1mm×Φ32mm
Filter Thread		M27×P0.5
Weight		120g
Working Temperature		-20°C~50°C

31MP LARGE IMAGE CIRCLE

- Support up to Φ32mm camera sensors
- Ultra-high resolution, full-frame resolution of 31MP camera , matching 3.45µm pixel size
- Ultra low distorion, TV distortion less than 0.1%
- Sable sharpness quality when temperature varies from - 20°C~50°C

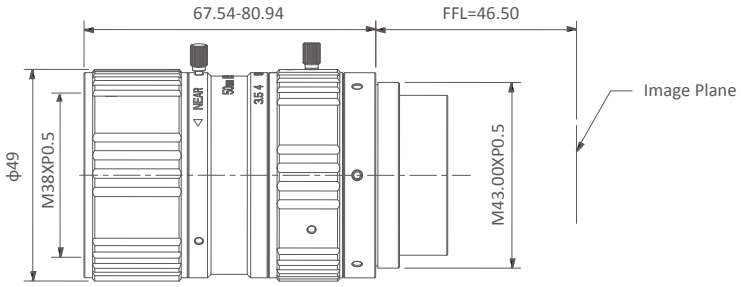

F32-5035-M43

Model		F32-5035-M43
Fcous Length		50mm
Image Circle		2'' (Φ32mm)
F#		F3.5 - F11
Angle of View	2'' (Φ32mm)	34.5°×28.4°×22.1°
	Φ28.6mm (4K-7µm)	30.8°
FBL		46.5mm
Working Distance		0.2m to inf
TV Distortion		0.07%
Relative Illumination	F3.5	58%
	F4.0	63%
Mount		M43×P0.5
Dimensions		80.94mm×Φ49mm
Filter Thread		M38×P0.5
Weight		406g
Working Temperature		-20°C~50°C

65MP LARGE IMAGE CIRCLE

- Support up to 46mm camera sensors
- Ultra-high resolution,full-frame resolution of 65MP camera,matching 3.2um pixel size
- Ultra low distorion, TV distortion less than 0.1%
- Stable sharpness quality when temperature varies from -20°C~50°C

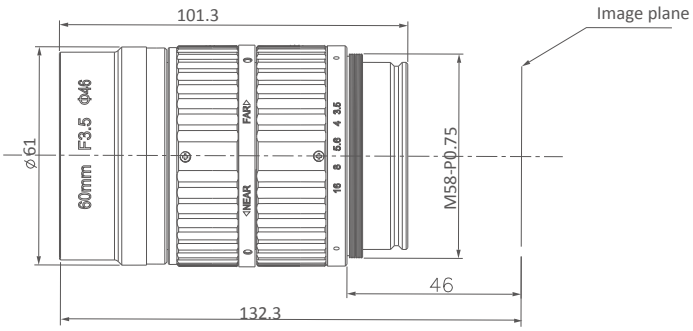

F46-6035-M58

Model		F46-6035-M58
Fcous Length		60mm
Image Circle		Φ46mm
F#		F3.5 - F16
Angle of View	Φ46mm	34.9°×26.7°×23.1°
	Φ34.7mm (65MP)	28.4°×21.9°×18.8°
FBL		46mm
Working Distance		0.32m to inf
TV Distortion		- 0.03%
Relative Illumination	F3.5	62%
Mount		M58×P0.75
Dimensions		101.3mm×Φ61mm
Filter Thread		No
Weight		503g
Working Temperature		-20°C~50°C

IRAYPLE CAMERA SDK

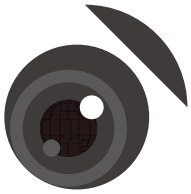

MACHINE VISION

- iRAYPLE SDK fully conforms to GenICam standards
- Transport layer is provided in manner of plug-ins, which is not visible to the applications, and more scalable
- Adequate API interfaces support secondary development with high efficiency
- Support Halcon, Sherlock, Labviewand some other 3rd-party platforms
- GigE Vision high-performance driver improves the capability of integrating and processing of image data packet while reducing the CPU usage of computer
- USB3 Vision driver supports USB3.0 Vision standards, and enables high-speed image data transmission at USB3.0 bandwic
- Users can use the MV Viewer to configure the camera parameters, grab, display and save the images

Camera Software Development Kit supports all iRAYPLE Area/Line Scan Industrial Cameras. It enables achieving stable and reliable data exchange between the industrial cameraand computer, facilitating rapid secondary development for users.

iRAYPLE SDK supports Windows/Linux 32bit/64bit platforms and includes the following modules

- GigE Vision high-performance driver
- USB3 Vision high-performance driver
- SDK (Support C,C++,C#,VB.NET,Python,Delphi,Java and etc)
- MV Viewer

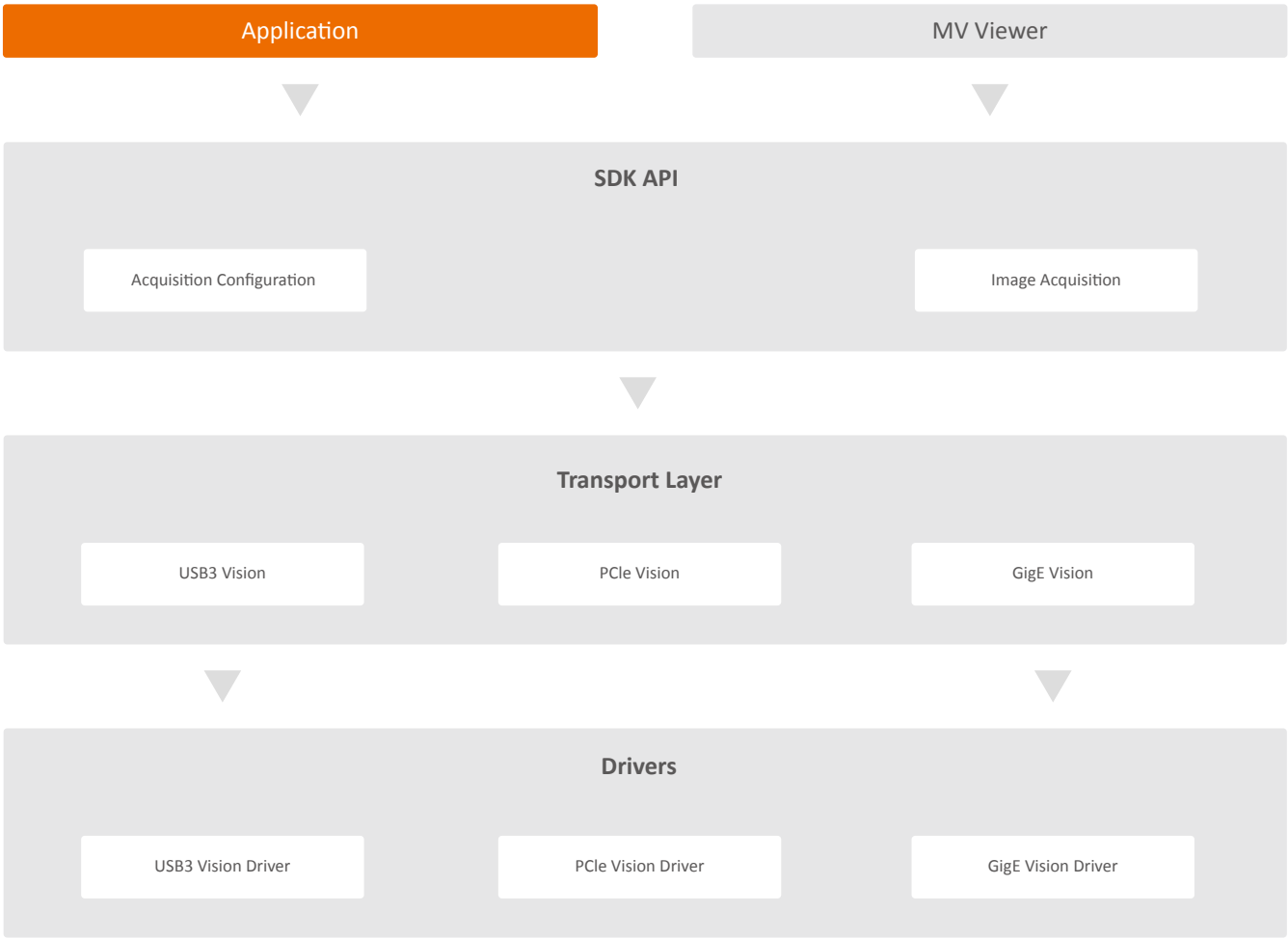

Make Factory Smarter

* Design and specifications are subject to change without notice.

Ver. 1, Aug. 2023

ZHEJIANG HUARAY TECHNOLOGY CO.,LTD.

Add: NO.590, Changhe Road, Binjiang District, Hangzhou, Zhejiang, P,.R.China
Website: www.irayple.com/en/home
Service Hotline: +86 400-681-8858
E-mail: overseas@irayple.com

LinkedIn

Website